–weishaupt–

manual

Installation and operating instruction

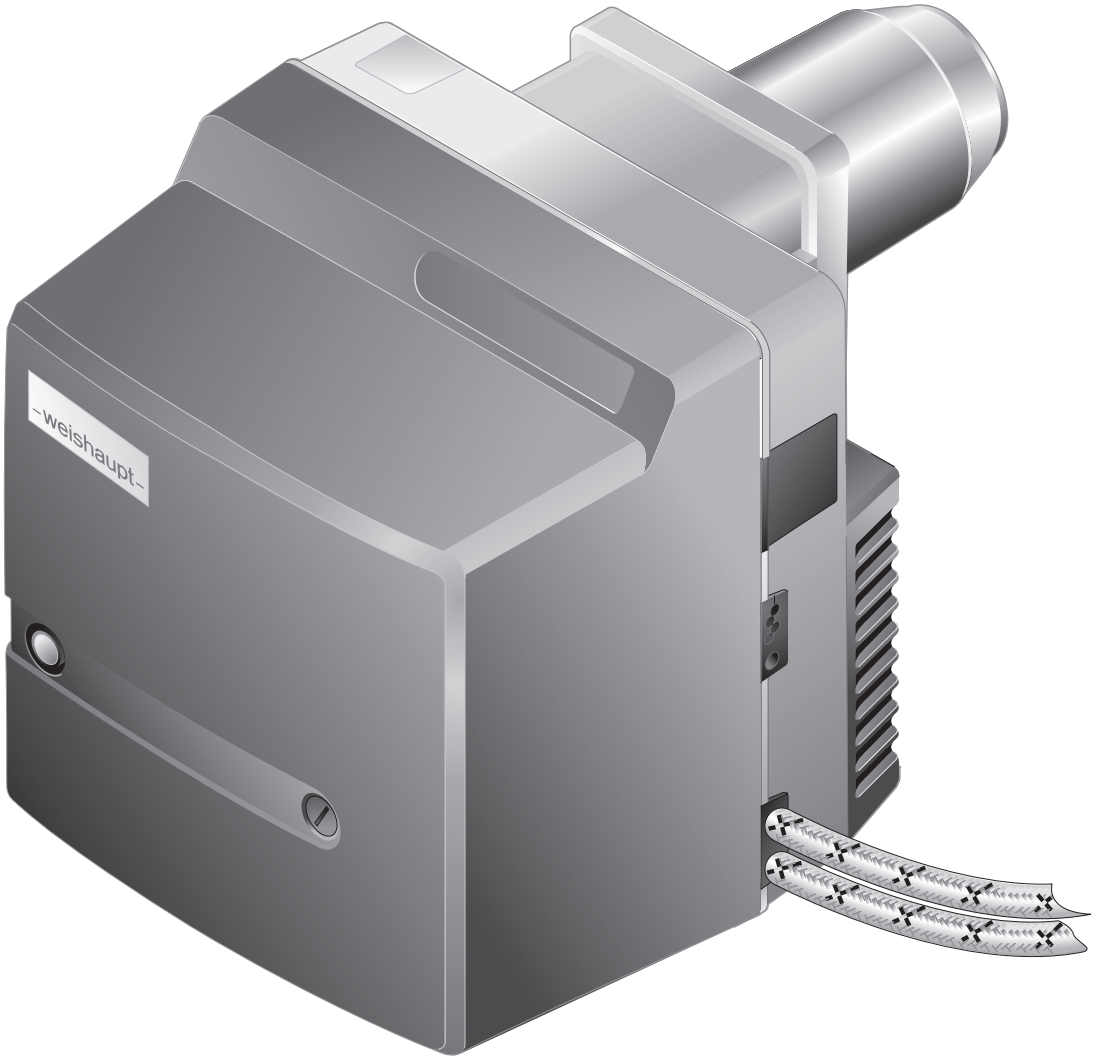

Oil burner WL10/2-D

83292502 ▪ 1/2026-07

1 User instructions ... 4
1.1 Target group ... 4
1.2 Symbols in the manual ... 4
1.3 Guarantee and Liability ... 5

2 Safety ... 6
2.1 Designated application ... 6
2.2 Safety symbols on the device ... 6
2.3 Safety measures ... 6
2.3.1 Personal protective equipment (PPE) ... 6
2.3.2 Normal operation ... 7
2.3.3 Electrical work ... 7
2.4 Alterations to the construction of the equipment ... 7
2.5 Noise emission ... 7
2.6 Disposal ... 7

3 Product description ... 8
3.1 Type key ... 8
3.2 Type and serial number ... 8
3.3 Function ... 9
3.3.1 Air supply ... 9
3.3.2 Oil supply ... 10
3.3.3 Electrical components ... 11
3.3.4 Program sequence ... 12
3.4 Technical data ... 14
3.4.1 Approval data ... 14
3.4.2 Electrical data ... 14
3.4.3 Ambient conditions ... 14
3.4.4 Permissible fuels ... 14
3.4.5 Emissions ... 15
3.4.6 Rating ... 16
3.4.7 Dimensions ... 17
3.4.8 Weight ... 17

4 Installation ... 18
4.1 Installation requirements ... 18
4.2 Selecting a nozzle ... 19
4.3 Burner installation ... 20
4.3.1 Rotate burner by 180° (optional) ... 21

5 Installation ... 22
5.1 Oil supply ... 22
5.2 Electrical connection ... 24

6 Operation ... 25
6.1 Operating panel ... 25
6.2 Display ... 25

7 Commissioning ... 26
7.1 Prerequisite ... 26
7.1.1 Connect measuring devices ... 27
7.1.2 Setting values ... 28
7.2 Adjusting the burner ... 30
7.3 Concluding work ... 31
7.4 Check combustion ... 32

8 Shutdown ... 33

9 Servicing ... 34
9.1 Notes on servicing ... 34
9.2 Service plan ... 36
9.3 Service position ... 37
9.4 Replace nozzle ... 38
9.5 Set ignition electrodes ... 39
9.6 Remove mixing head ... 40
9.7 Set mixing head ... 41
9.8 Removing the air regulator ... 42
9.9 Removing and refitting angle drive ... 43
9.10 Removing and refitting oil pump ... 44
9.11 Removing and refitting fan wheel ... 45
9.12 Remove burner motor ... 46
9.13 Removing and refitting oil pump filter ... 47
9.14 Replacing the fuse ... 48

10 Troubleshooting ... 49
10.1 Procedures for fault conditions ... 49
10.1.1 Illuminated push button off ... 49
10.1.2 Illuminated push button red ... 50
10.1.3 Illuminated push button flashes ... 53
10.2 Operating problems ... 54

11 Technical documentation ... 55
11.1 Conversion table unit of pressure ... 55
11.2 Wiring diagram ... 56

12 Project planning ... 58
12.1 Oil supply ... 58
12.2 Continuous running fan or post-purge ... 59

13 Spares ... 60

14 Notes ... 74

15 Key word index ... 77

1 User instructions

This manual forms part of the equipment and must be kept on site.

Translation of original operating instructions



Carefully read the manual prior to working on the unit.

1.1 Target group

The manual is intended for the operator and qualified personnel. It should be observed by all personnel working with the unit.

Work on the unit must only be carried out by personnel who have had the relevant training and instruction.

Persons with limited physical, sensory or mental capabilities may only work on the unit if they are supervised or have been trained by an authorised person.

Children must not play with the unit.

1.2 Symbols in the manual

 **DANGER**	Danger with high risk. Non observance can lead to serious injury or death.
 **WARNING**	Danger with medium risk. Non observance can lead to serious injury or death.
 **CAUTION**	Danger with low risk. Non observance can cause injury to personnel.
 **NOTICE**	Non observance can cause damage to the equipment and environmental damage.
	Important information
▶	Requires direct action
✓	Result after an action
▪	Itemisation
…	Range of values or ellipsis
02	Replacement character for digits, e. g. language key for Print No.
`Display text`	Font for text that appears in the display

1.3 Guarantee and Liability

Guarantee and liability claims for personal and equipment damage are excluded, if they can be attributed to one or more of the following causes:

- non approved application
- non-observance of the manual
- operation with faulty safety equipment
- continual operation despite a fault
- improper installation, commissioning, operation and service
- repairs, which have been carried out incorrectly
- the use of non-original Weishaupt parts
- force majeure
- unauthorised modifications made to the unit
- the installation of additional components, which have not been tested with the unit
- the installation of combustion chamber inserts, which impede full flame formation
- unsuitable fuels
- defects in the inlet lines

2 Safety

2.1 Designated application

The burner is suitable for operation on heat exchangers to EN 303 and combustion chambers to EN 267.

If the burner is not used on combustion chambers to EN 303 and EN 267, a safety assessment of combustion and flame stability during individual process conditions, as well as the shutdown limits of the combustion plant has to be carried out and documented.

The Technical data must be adhered to [ch. 3.4].

The combustion air must be free from aggressive compounds (e. g. Halogens).
If the combustion air is contaminated, increased cleaning and servicing will be required. In this case ducted air intake is recommended.

The burner should preferably be operated indoors.
If the burner is not operated indoors, weather protection is required to protect from rain and direct sunlight. The ambient conditions must be adhered to [ch. 3.4.3].

Improper use could:
- endanger the health and safety of the user or third parties
- cause damage to the unit or other material assets

2.2 Safety symbols on the device

Symbol	Description	Position
	Warning of electrical voltage	Burner housing
	Dangerous electric voltage	Ignition unit

2.3 Safety measures

Safety relevant fault conditions must be eliminated immediately.

Components, which show increased wear and tear or whose design lifespan is or will be exceeded prior to the next service should be replaced as a precaution.

The design lifespan of the components is listed in the service plan [ch. 9.2].

2.3.1 Personal protective equipment (PPE)

Use the necessary personal protective equipment for all work.

Personal protective equipment protects the user when working on the device.

Safety shoes must be worn during all work carried out on the device.

Further necessary PPE is shown in the respective section by a mandatory symbol.

Symbol	Description	Information
	Use hand protection	▶ Wear suitable protective gloves.

2.3.2 Normal operation

- All labels on the unit must be kept in a legible condition and replace if necessary.
- Stipulated service work should be carried out at regular intervals.
- Only operate the unit with its cover closed.
- Ensure combustion air supply is unimpeded.

2.3.3 Electrical work

When working on live components please ensure you:
- observe the accident prevention instructions (e. g. DGUV Regulation 3) and adhere to local directives
- use tools in accordance with EN IEC 60900

The device contains components, which could be damaged by electrostatic discharge (ESD).
When working on circuit boards and contacts:
- do not touch circuit boards or contacts
- if necessary, take ESD protective measures

2.4 Alterations to the construction of the equipment

All conversions require written approval from Max Weishaupt SE.

- No additional components may be fitted, which have not been tested for use with the equipment.
- Do not use combustion chamber inserts, which hinder flame burnout.
- Use only original Weishaupt replacement parts.

2.5 Noise emission

The noise emissions are determined by the acoustic behaviour of all components fitted to the combustion system.

Prolonged exposure to high noise levels can lead to loss of hearing. Provide operating personnel with protective equipment.

Noise emissions can further be reduced with a sound attenuator.

2.6 Disposal

Dispose of all materials and components in a safe and environmentally friendly way at an authorised location. Observe local regulations.

3 Product description

3.1 Type key

WL10/2-D

Type	
W	Series: Compact burner
L	Fuel: Oil EL
10	Size
2	Ratings size
D	Construction stage

3.2 Type and serial number

The type and serial number on the type plate clearly identify the product. They are required by Weishaupt's customer service department.

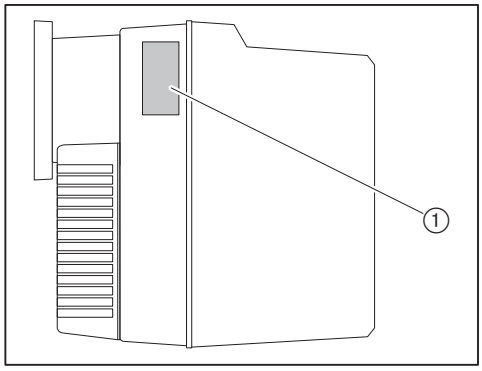

① Name plate

Mod.: _____	**Ser. Nr.:** _____

3.3 Function

3.3.1 Air supply

Air damper

The air damper regulates the air quantity required for combustion. The air damper position is set using a setting screw on the air damper or the actuator (optional).

At burner shutdown the actuator (optional) automatically closes the air damper. This reduces heat loss in the heat exchanger.

Fan wheel

The fan wheel supplies the air from the air intake housing to the combustion head.

Diffuser

The air gap between flame tube and diffuser is adjusted by positioning the diffuser. This adjusts the mixing pressure and the air quantity required for combustion.

3.3.2 Oil supply

Oil pump

The pump draws the oil through the supply line and carries it under pressure to the oil nozzle. The pressure regulating valve keeps the oil pressure constant.

A solenoid valve opens and closes the oil supply to the nozzle. The pressure regulating valve and solenoid valve are integrated into the pump.

Sequence diagram

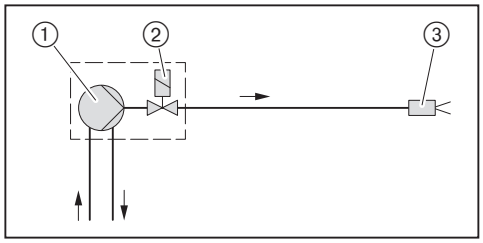

① Oil pump on burner
② Solenoid valve on the oil pump
③ Nozzle head with nozzle

3.3.3 Electrical components

Combustion Manager

The combustion manager W-FM is the control unit of the burner.

It controls the sequence of operation and monitors the flame.

Burner motor

The burner motor drives the fan wheel and the oil pump.

Ignition unit

The electronic ignition unit creates a spark at the electrode, which ignites the fuel/ air mixture.

Flame sensor

The combustion manager monitors the flame signal via the flame sensor.

If the flame signal becomes too weak, the combustion manager carries out a controlled shutdown.

3.3.4 Program sequence

Pre-purge without actuator

At heat demand, the burner motor starts after the initialisation time (T_I) has elapsed.

The combustion chamber is pre-purged.

Pre-purge with actuator (optional)

At heat demand, the air damper actuator starts after the initialisation time (T_I) has elapsed.
If the actuator limit switch (S2) is closed, the burner motor starts.

The combustion chamber is pre-purged.

Ignition

Ignition starts with the pre-purge time (T_V).

Fuel release

Following the pre-purge time (T_V) the solenoid valve (K11) opens and releases the fuel.

Safety time

With fuel release, safety time (T_S) and post-ignition time (T_{NZ}) starts.

The flame signal must be present within the safety time (T_S).

Operation

The combustion manager monitors the flame signal via the flame sensor.

Post-purge

If there is no longer a heat demand, the solenoid valve (K11) closes and stops the fuel supply.

Post-purge time (T_N) begins.

Following the post-purge time (T_N) the burner motor switches off.

The actuator (optional) drives to Closed position.

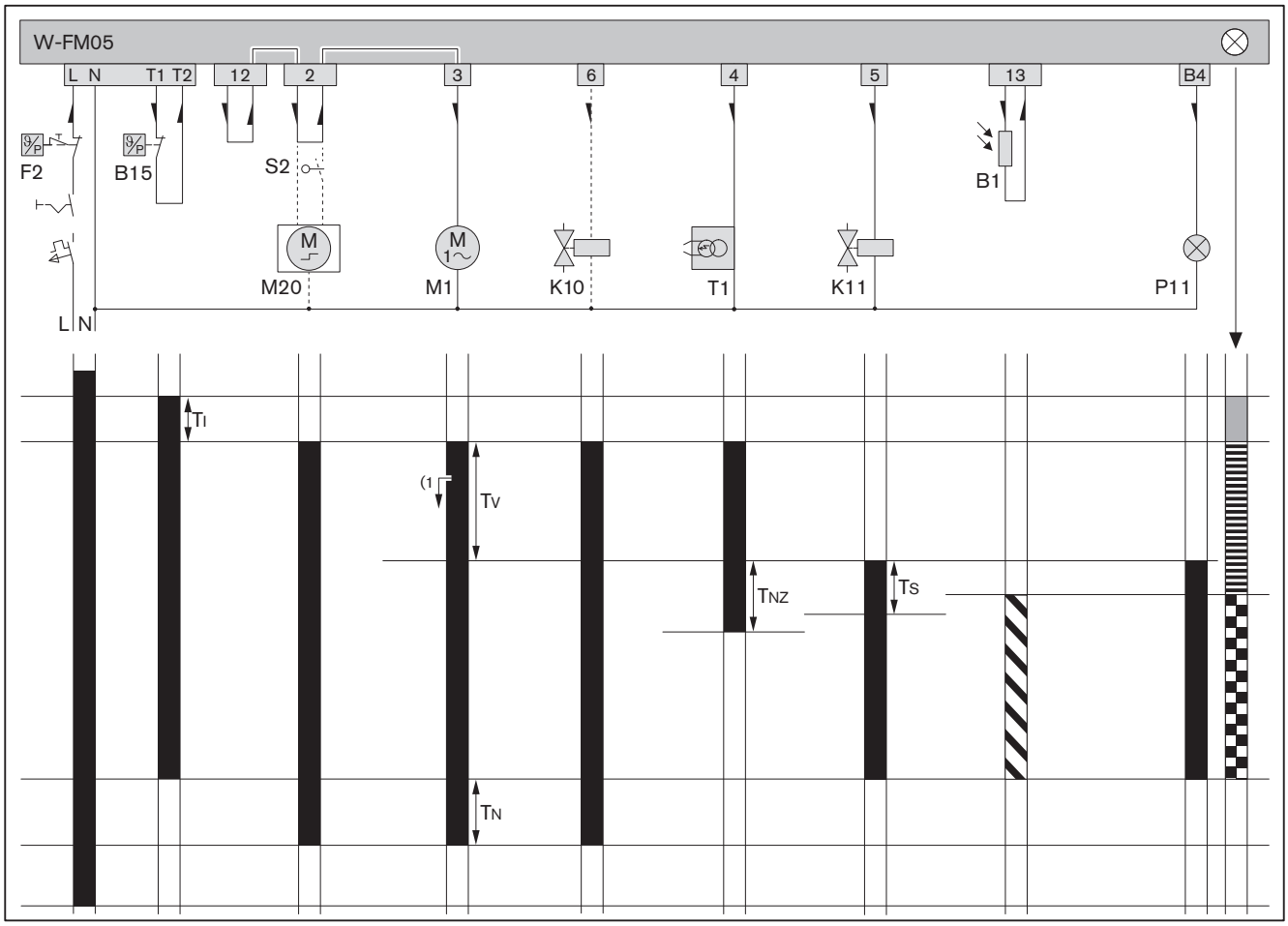

B1	Flame sensor	T_I	Initialisation time: 1 s
B15	Temperature or pressure regulator	T_N	Post-purge time: 4.5 s
F2	Temperature or pressure limiter	T_{NZ}	Post-ignition time: 6.5 s
K10	Anti siphon valve (optional)	T_S	Safety time: 5 s
K11	Solenoid valve	T_V	Pre-purge time: 16.2 s
M1	Burner motor		Voltage is applied
M20	Air damper actuator (optional)		Flame signal present
P11	Control lamp operation (optional)		Current path
S2	Actuator limit switch (optional)		START (orange)
T1	Ignition unit		Ignition phase (flashing orange)
(1	Actuator start delay (optional)		Burner operation (green)

3.4 Technical data

3.4.1 Approval data

DIN CERTCO	5G1005
Basic standards	EN 267:2020 Additional standards, see EU Declaration of Conformity.

3.4.2 Electrical data

Mains voltage / Mains frequency	230 V/50 Hz
Consumption at start	max 315 W
Consumption during operation	max 215 W
Power consumption	max 1.3 A
Internal unit fuse	T6.3H, IEC 127-2/5
External fuse	B6 A

3.4.3 Ambient conditions

Temperature in operation	–10(1 … +40 °C
Temperature during transport/storage	–20 … +70 °C
relative humidity	max 80 %, no dew point
Installation elevation	max 2000 m(2

(1 With the relevant suitable fuel oil and layout of oil supply.
(2 Consultation with Weishaupt is required for higher installation elevation.

3.4.4 Permissible fuels

- Fuel oil EL to DIN 51603-1
- Fuel oil EL to ÖNORM-C1109 (Austria)
- Fuel oil EL to SN 181 160-2 (Switzerland)
- Green Fuels, see supplementary manual (Print No. 835910xx)

3.4.5 Emissions

Flue gas

In accordance with EN 267, the burner meets the requirements of emission class 3.

The NO_x values are influenced by:
- combustion chamber dimensions
- flue gas system
- Fuel
- combustion air (temperature and humidity)
- medium temperature
- Excess air

Combustion chamber dimensions, see Weishaupt Partner Portal (Documents and Applications → Online Applications → NO_X calculation for burner).

Sound levels

Dyad noise emission values	
Measured sound power level L_{WA} (re 1 pW)	69 dB(A)(1
Uncertainty value K_{WA}	4 dB(A)
Measured sound pressure level L_{pA} (re 20 µPa)	63 dB(A)(2
Uncertainty value K_{pA}	4 dB(A)

(1 Determined to ISO 9614-2.
(2 Determined at 1 metre distance from the front of the burner.
The measured noise levels plus uncertainty values form the upper limit value, which could occur when measuring.

3.4.6 Rating

Combustion heat rating

Fuel oil	35 … 70 kW 2.9 … 5.9 kg/h(1

(1 The oil throughput data relates to a calorific value of 11.9 kWh/kg for fuel oil EL.

Capacity graph

Capacity graph to EN 267.

The capacity data given relates to an installation elevation of 500 m above sea level. For installation elevations above 500 m a capacity reduction of approx. 1 % per 100 m applies.

A limited capacity graph is valid for ducted air intake.

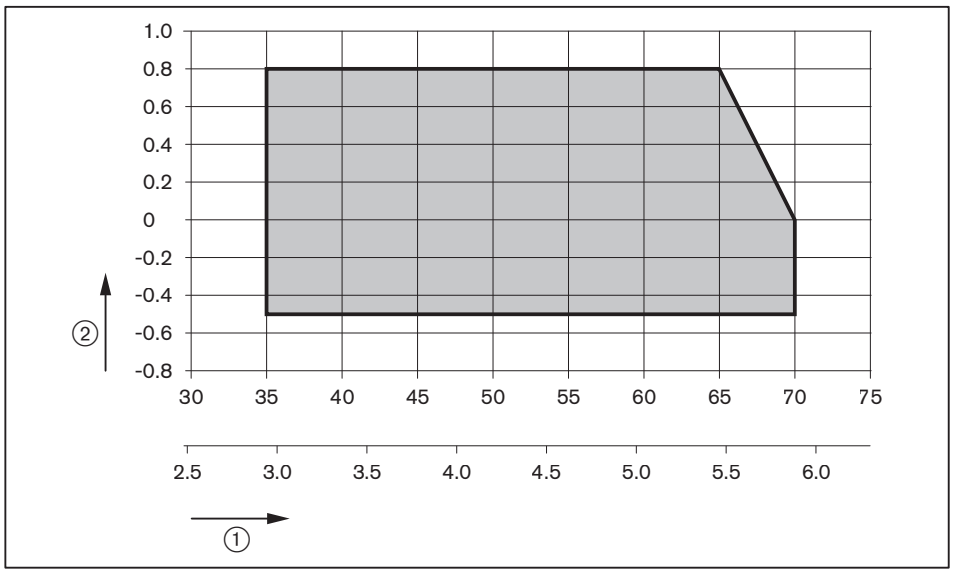

① Combustion heat rating [kW] or [kg/h]
② Combustion chamber pressure [mbar]

3.4.7 Dimensions

Burner

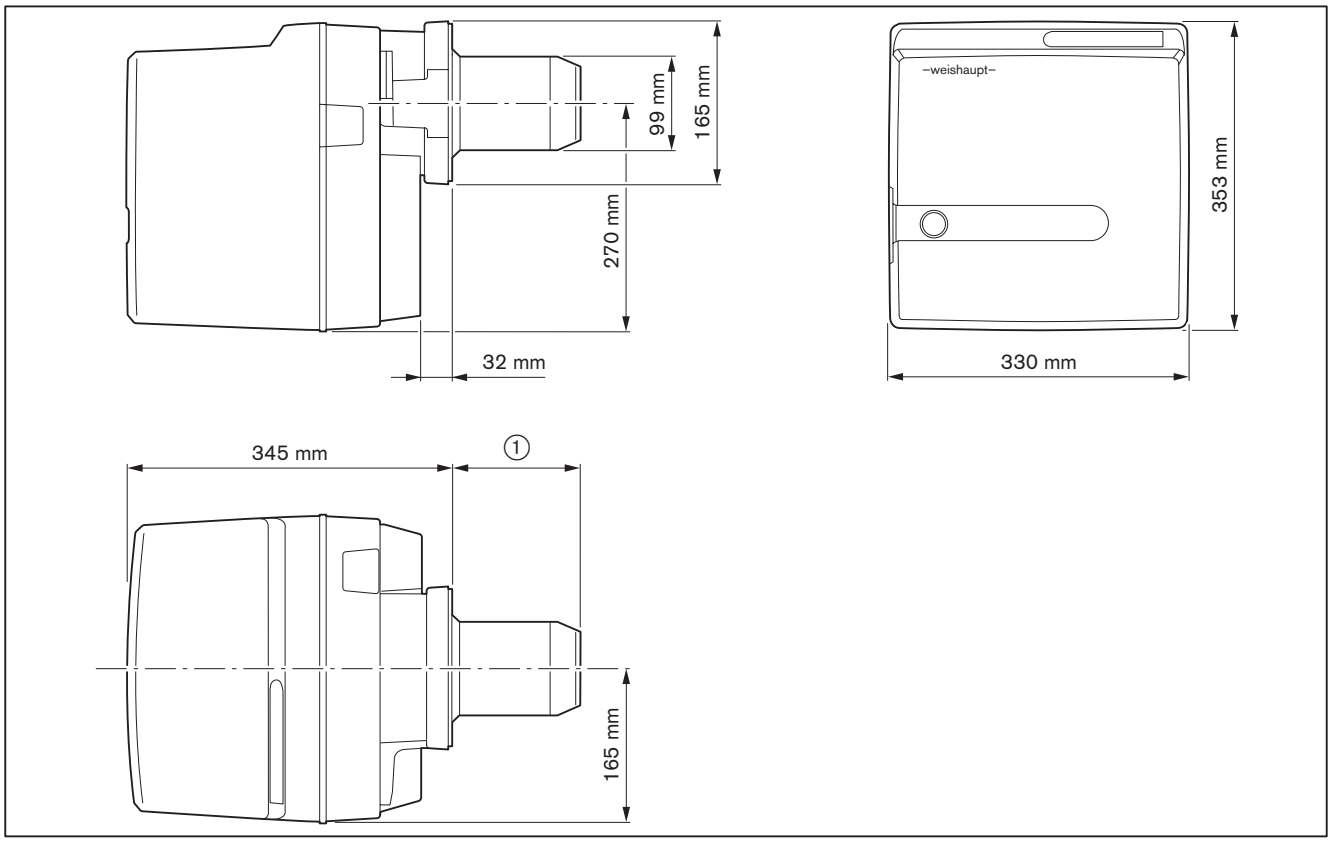

① 137 mm without combustion head extension
237 mm with combustion head extension (100 mm)
337 mm with combustion head extension (200 mm)
437 mm with combustion head extension (300 mm)

3.4.8 Weight

approx. 14 kg

4 Installation

4.1 Installation requirements

Burner type and capacity graph

Burner and heat exchanger must be matched.

- ▶ Check burner type and burner capacity.

Installation location

- ▶ Prior to installation ensure that:
  - sufficient space is available for normal and service position [ch. 3.4.7]
  - sufficient combustion air is available and, if necessary, a ducted air intake is installed

Prepare heat exchanger

The refractory ③ must not protrude beyond the front edge of the combustion head. The refractory can take a conical shape (min 60°).

Refractory may not be required on boilers with water-cooled front, unless the manufacturer gives other instructions.

Following installation, the aperture ④ between flame tube and refractory should be filled with flame-proof, resilient insulating material. Do not make solid.

Heat exchangers with deep refractories or thick doors, or heat exchangers with reverse flame combustion chambers may require a combustion head extension. Head extensions of 100, 200 and 300 mm are available. Dimension ② then changes according to the head extension used.

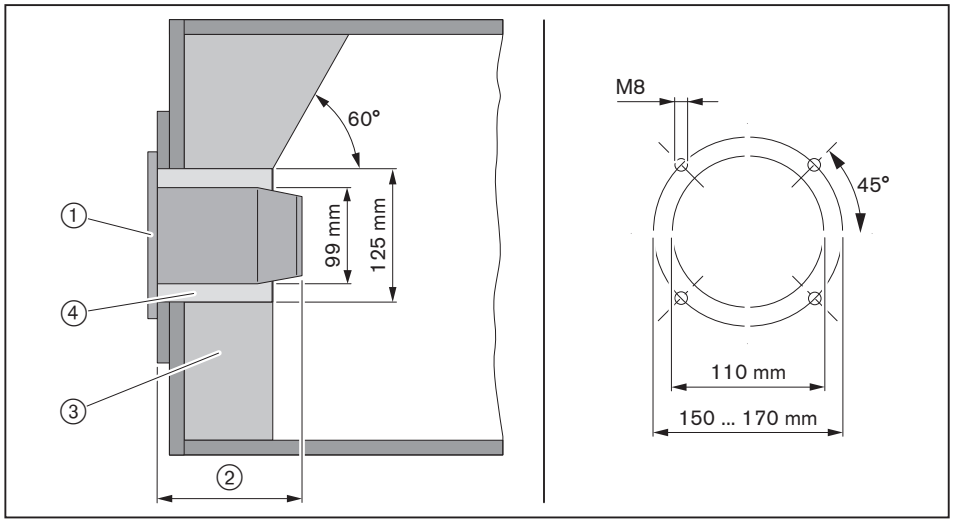

① Flange gasket
② 137 mm
③ Refractory
④ Aperture
⑤ Boiler plate recess

4.2 Selecting a nozzle

► Determine nozzle size.

Recommended nozzles

Make	Characteristics
Steinen[1]	60°S, 60°H
Fluidics	45°SF[2], 45°HF

[1] We recommend Fluidics nozzles for nozzle sizes 1.00 gph and 1.10 gph.
[2] Only from 12 bar pump pressure and single pipe system (higher oil temperatures).

Pump pressure setting

10 … **12** … 14 bar

Spray characteristic and spray angle varies depending on pump pressure.

Nozzle selection table

Different load values are possible due to tolerances.

	Burner capacity [kW] at pump pressure				
Nozzle size [gph]	**10 bar**	**11 bar**	**12 bar**	**13 bar**	**14 bar**
0.75	33.3	35.7	36.9	38.1	40.5
0.85	38.1	40.5	41.7	44.0	45.2
1.00	45.2	47.6	49.5	51.2	53.6
1.10	49.5	52.4	54.7	57.1	58.3
1.25	55.9	59.5	61.9	64.3	66.6
1.35	60.7	64.3	66.6	69.0	72.6
1.50	67.8	71.4	–	–	–

Conversion of burner capacity to oil throughput see formula below.

$$\text{Oil throughput in kg/h} = \frac{\text{Burner capacity in kW}}{\text{11.9 kWh/kg}}$$

4.3 Burner installation

- ► Remove burner flange ① from burner housing.
- ► Fit flange gasket ② and burner flange ① to the heat exchanger using screws ③.
- ► The aperture between flame tube and refractory should be filled with flame-proof, resilient insulating material (do not make solid).

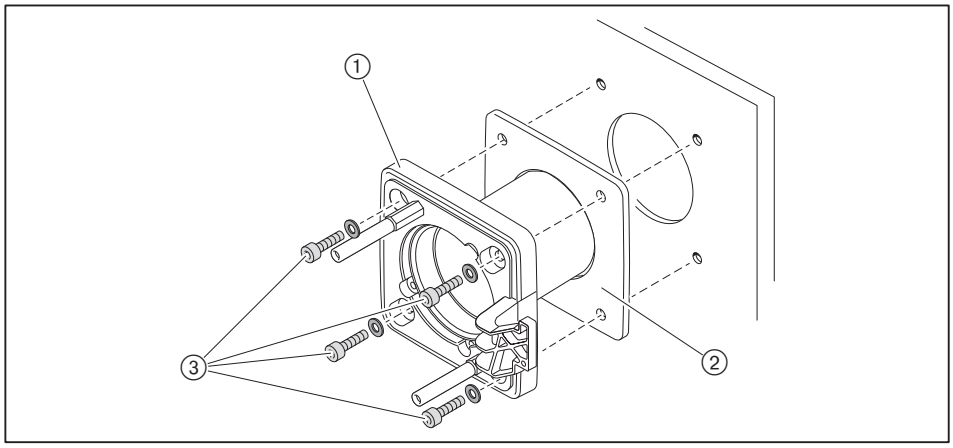

It is possible to install the burner rotated by 180 if space is limited. This requires conversion measures [ch. 4.3.1].

- ► Fit nozzle [ch. 9.4].
- ► Set ignition electrodes [ch. 9.5]
- ► Check nozzle distance and adjust if necessary [ch. 9.7].
- ► Mount burner with screws ① to burner flange.

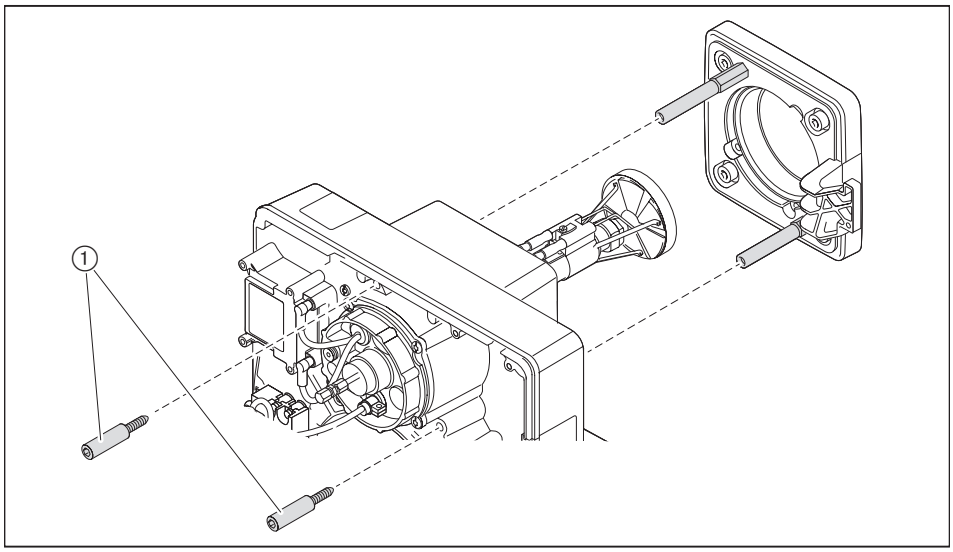

4.3.1 Rotate burner by 180° (optional)

A pressure hose (DN 4, 286 mm) for installation rotated by 180° is required.

- ▶ Place stay bolt ① into neighbouring threaded holes.

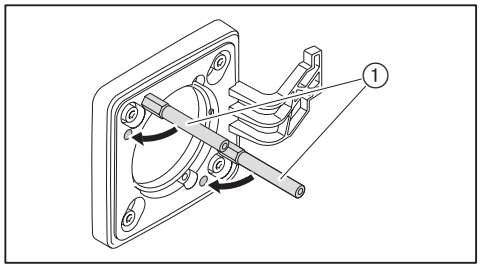

- ▶ Place burner into service position A [ch. 9.3].
- ▶ Undo screw ① on diffuser and turn diffuser by 180°.
- ▶ Fit nozzle [ch. 9.4].
- ▶ Set ignition electrodes [ch. 9.5]
- ▶ Check nozzle distance and adjust if necessary [ch. 9.7].
- ▶ Rotate burner by 180° and secure with screws ③.
- ▶ Remove oil line ④.
- ▶ Undo fixing screws ② for oil pump and rotate oil pump by 180°.
- ▶ Tighten screws ②.
- ▶ Fit pressure hose ⑤ supplied with conversion kit:
  - fit elbow end to pump
  - fit straight end to nozzle assembly

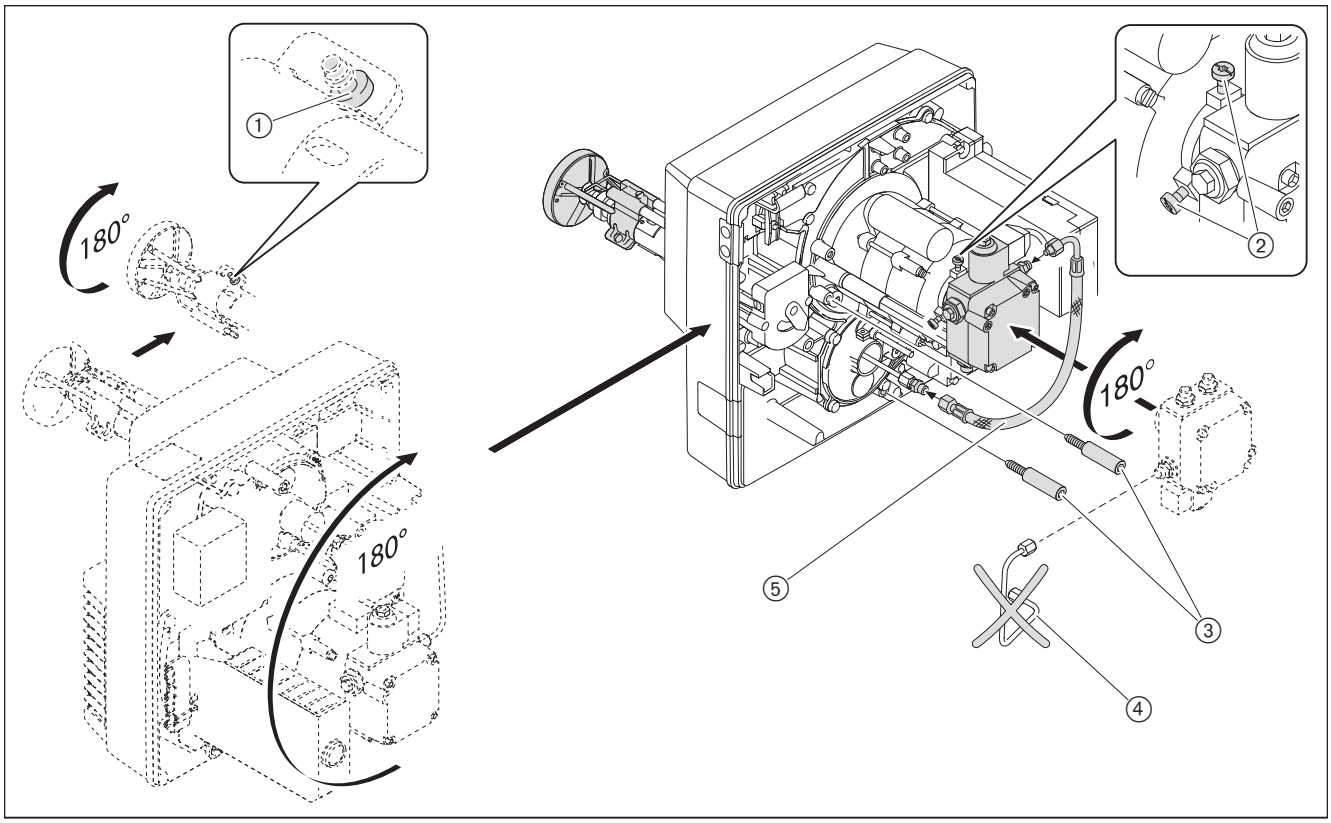

5 Installation

5.1 Oil supply

The oil supply may only be installed by qualified personnel.

EN 12514-2, DIN 4755, Tyrol, work sheet DWA-A 791 (TRwS 791) and observe the local regulations.

Check conditions for oil pump

Suction resistance	max 0.4 bar(1
Flow pressure	max 2 bar(1
Flow temperature	max 60 °C(1

(1 Measured at the pump.

Check conditions for oil hoses

Length	1200 mm
Oil hose connection	G⅜
Nominal pressure	10 bar
Thermal load	max 100 °C

Connect oil supply

NOTICE

Damage to the oil pump due to incorrect connection
Mixing up supply and return can damage the oil pump.
► Ensure correct connection of oil hoses to the supply and return of the pump.

► Fit oil hoses with bracket ④ and grommet ③ to burner.

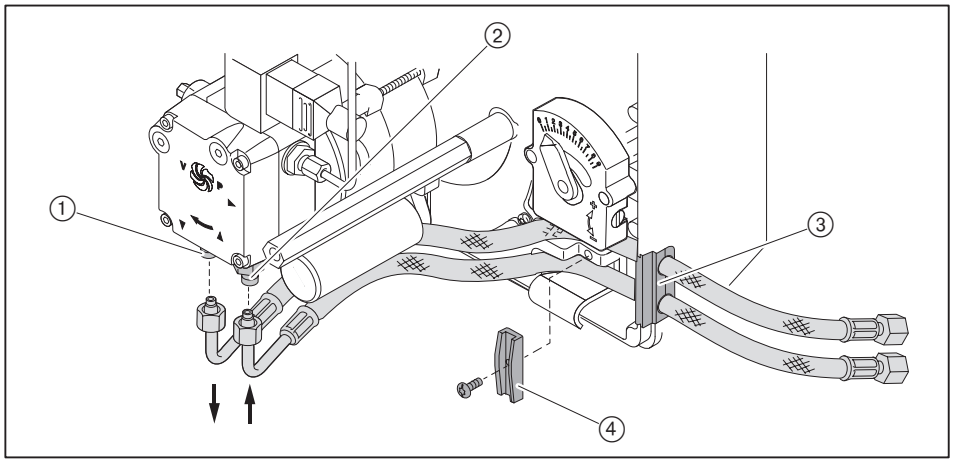

① Return
② Flow

► Connect oil supply and:
- do not twist oil hoses
- avoid mechanical tension
- consider length of hose required for the service position
- do not kink oil hoses (curve radius ① of 50 mm must be maintained)

If these conditions for connection can not be met:
► adapt oil supply on site.

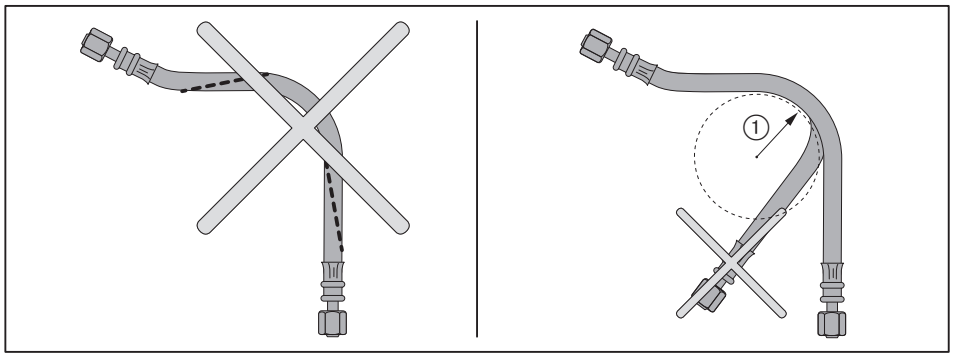

Purge oil supply and ensure it is tight

NOTICE

Oil pump seized due to running dry
Pump could be damaged.
► Fill oil supply with oil and purge.

► Ensure oil supply is tight.

5.2 Electrical connection

WARNING

Risk of electric shock
Working on the device when voltage is applied can lead to electric shock.
- ► Isolate the device from the power supply prior to starting any work.
- ► Safeguard against accidental restart.

The electrical connection must only be carried out by qualified electricians.
Observe local regulations.

Observe wiring diagram [ch. 11.2].

- ► Check polarity and wiring of 7 pole connection plug ①.
- ► Plug in connection plug ①.

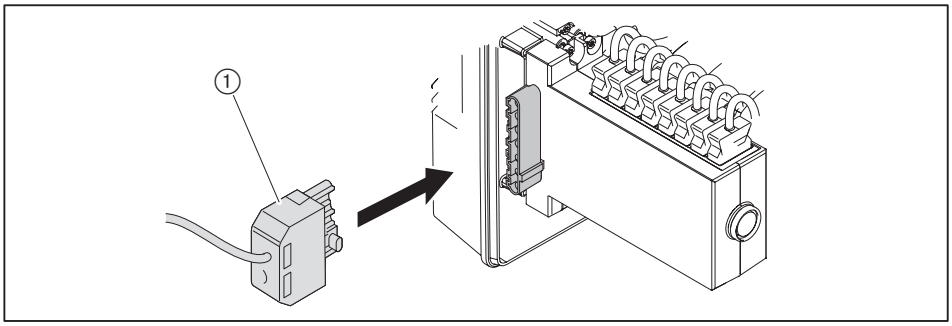

With remote reset, install connection line separately, do not exceed maximum cable length of 10 metres.

6 Operation

6.1 Operating panel

NOTICE

Damage to the combustion manager due to incorrect operation
Excessive pressure applied to the illuminated push button can damage the combustion manager.
► Only lightly press illuminated push button.

The illuminated push button on the combustion manager has the following functions:
- Display operating condition [ch. 6.2]
- Display fault codes [ch. 10.1.2]
- Reset burner lockout [ch. 10.1.2]

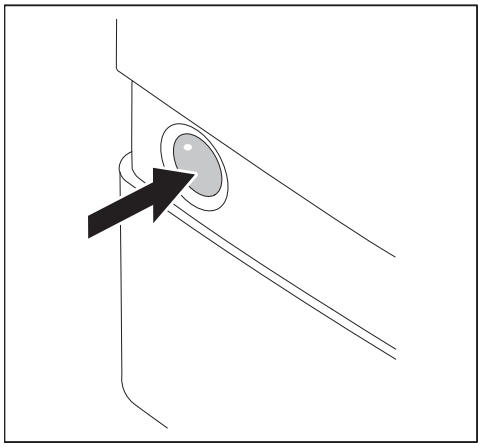

Re-starting the burner during burner operation:
► Press illuminated push button for 1 second.

6.2 Display

Illuminated push button	Operating condition
orange	Start phase
Flashing orange	Ignition and pre-purge phase
Green	Operation
red	Fault [ch. 10]

Additional flashing signals can be read off as fault code [ch. 10].

7 Commissioning

7.1 Prerequisite

Commissioning must only be carried out by qualified personnel.

Only correctly carried out commissioning ensures the operational safety.



Do not operate the burner outside of the capacity graph [ch. 3.4.6].

► Prior to commissioning ensure that:
- all assembly and installation work has been carried out correctly
- sufficient combustion air is available and, if necessary, a ducted air intake is installed
- the annulus between flame tube and heat exchanger is filled
- the heat exchanger is filled with medium
- the regulating, control and safety devices are functioning and set correctly
- the flue gas ducts are unimpeded
- a measuring point conforming to standards is available to measure the flue gas
- the heat exchanger and flue gas ducting up to the test point are sound, as extraneous air influences the test results
- the operating instructions of the heat exchanger are complied with
- a heat demand is available

Additional system-related tests could be necessary. Please observe the operating guidelines for the individual components.

On installations with process equipment, the conditions for safe operation and commissioning must be met, see worksheet 8-1 (Print No. 831880xx).

7.1.1 Connect measuring devices

Pressure measuring device and ammeter

- Pressure measuring device for mixing pressure.
- Ammeter for flame signal.

► Connect pressure measuring device ②.

Test adapter No. 13 required (Order No. 240 050 12 052).
► Unplug plug No. 13.
► Plug in test adapter No. 13.
► Connect ammeter ①.

Flame signal QRB4

Extraneous light detection from	> 12 µA
Minimum flame signal	35 µA
Recommended flame signal	45 … 72 µA

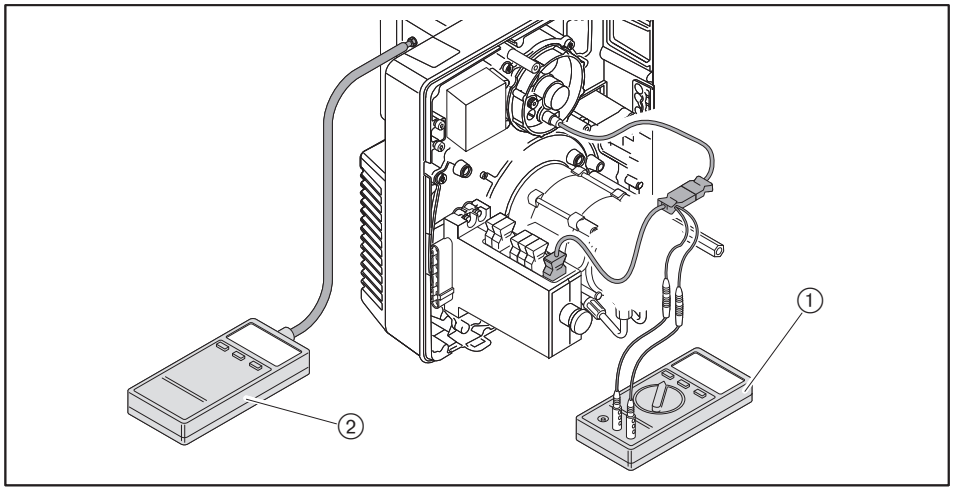

Oil pressure measuring devices on oil pump

- Vacuum gauge for suction resistance/flow pressure.
- Pressure gauge for pump pressure.

NOTICE

Oil leakage from oil pressure measuring devices due to constant load
Oil pressure measuring devices could be damaged and cause environmental pollution through leakage.
► Remove oil measuring devices once commissioning is complete.

► Close fuel shut off devices.
► Remove closing plug on the pump.
► Connect vacuum gauge ① and pressure gauge ②.

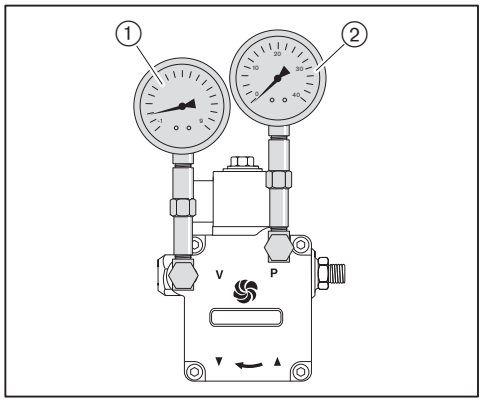

7.1.2 Setting values

Set mixing head relative to the combustion heat rating required. For this, the diffuser setting and the air damper setting should be matched.

Determine diffuser and air damper settings

Do not operate the burner outside of the capacity graph [ch. 3.4.6].

► Determine the diffuser setting (dimension X) and air damper setting required from the diagram and note down.

Example

Burner capacity required	57 kW
Diffuser setting (dimension X)	10.0 mm
Air damper setting	3.7

Diffuser default settings

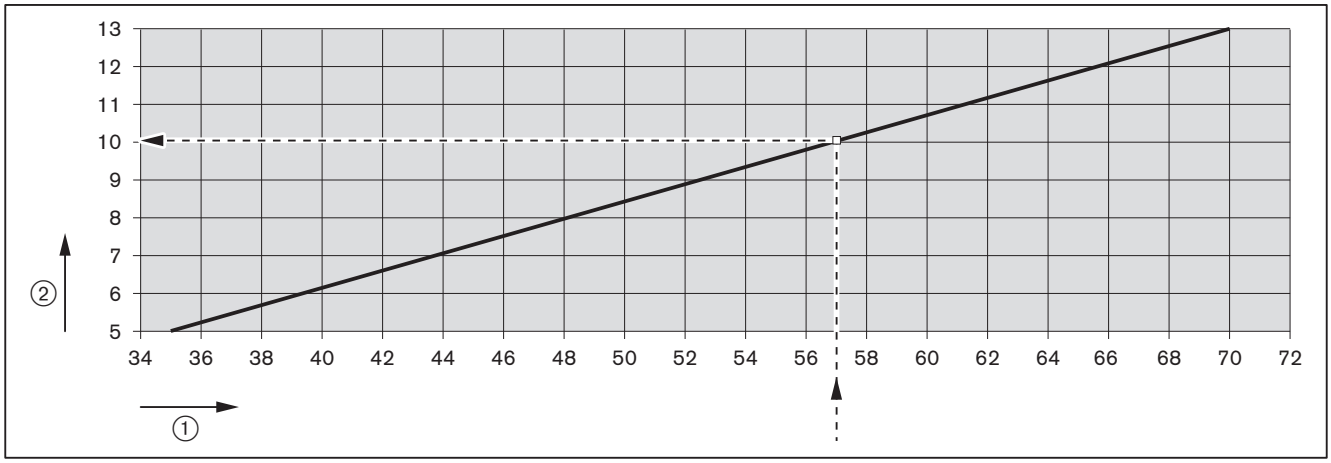

① Combustion heat rating [kW]
② Diffuser setting (dimension X) [mm]

Air damper default settings

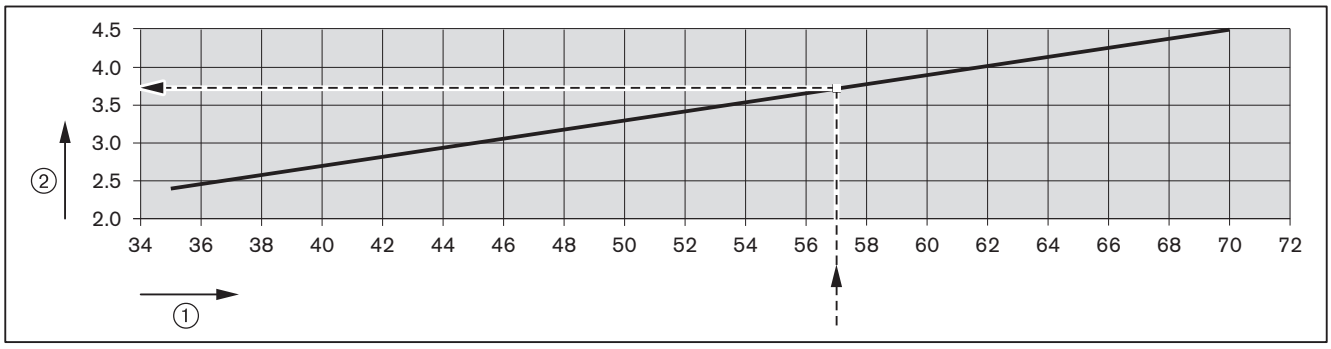

① Combustion heat rating [kW]
② Air damper setting

Set diffuser

With dimension X = 0 mm the indicating bolt is flush with the cover of the nozzle assembly.

► Turn screw ①, until dimension X equals the value determined.

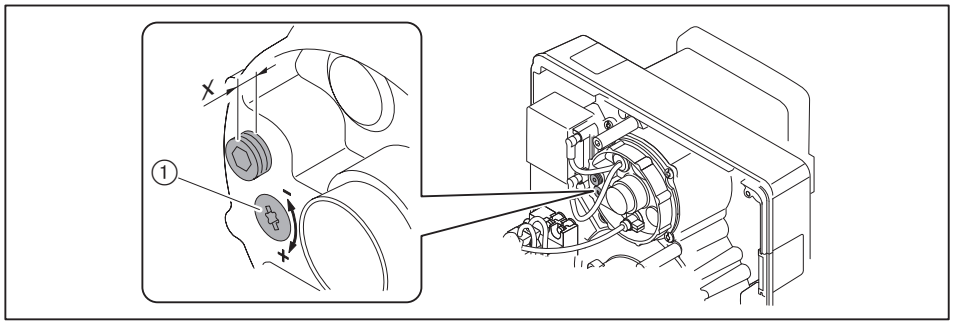

Set air damper

► Turn setting screw ①, until the scale shows the value determined.

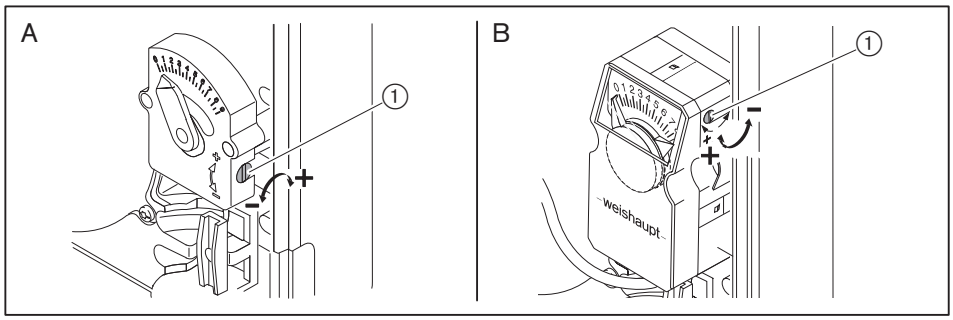

A Manual adjustment
B Actuator (optional)

Determine mixing pressure

► Determine the mixing pressure required for the pre-set combustion heat rating from the diagram and note down.

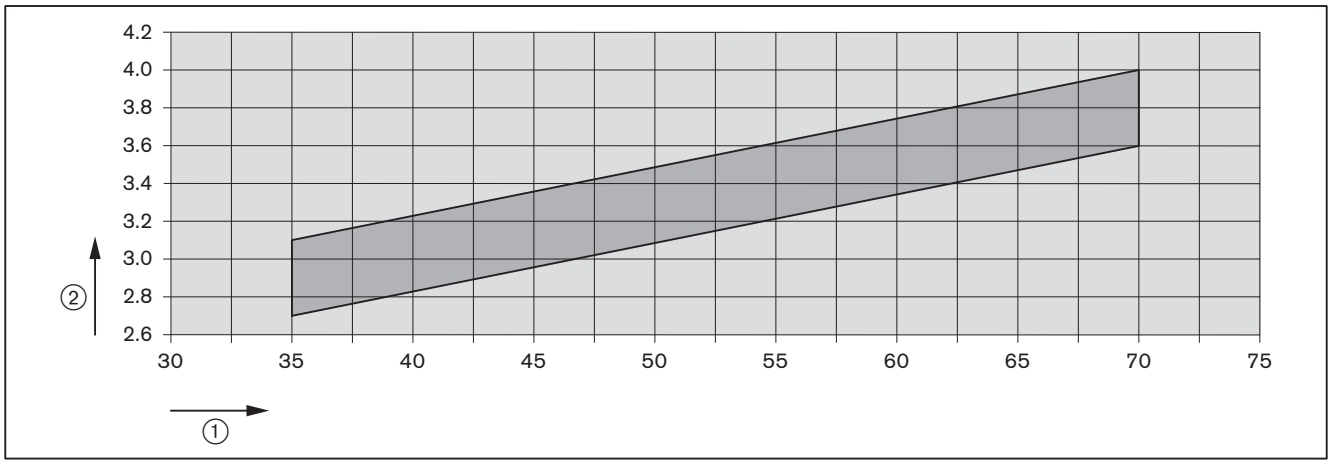

① Combustion heat rating [kW]
② Mixing pressure [mbar]
Guide values, which may vary depending on combustion chamber resistance.

7.2 Adjusting the burner

WARNING

Risk of electric shock
Touching the ignition device can lead to electric shock.
► Do not touch ignition device during the ignition process.

► During commissioning check:
  ▪ Flame signal [ch. 7.1.1]
  ▪ Suction resistance or flow pressure of oil pump [ch. 5.1]
  ▪ Mixing pressure [ch. 7.1.2]

1. Start the burner

Heat demand from the boiler controller required.
► Open fuel shut off devices.
► Switch on voltage supply.
✓ Illuminated push button lights up red.
► Press illuminated push button for 1 second.
✓ Burner starts in accordance with the programme sequence [ch. 3.3.4].

2. Adjust combustion

The pump pressure must be set according to the nozzle selected [ch. 4.2].
► Check pump pressure at pressure gauge.
► Set pressure using pressure regulating screw ①:
  ▪ increase pressure: clockwise rotation
  ▪ decrease pressure: anticlockwise rotation

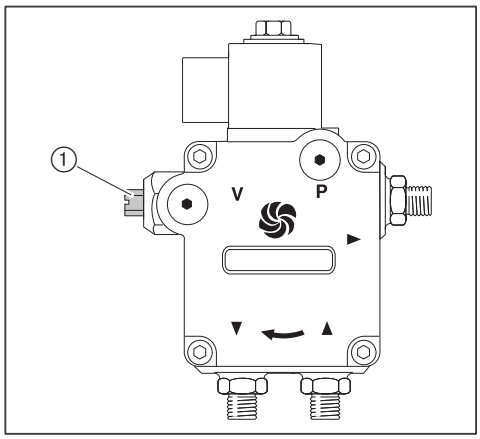

► Check combustion values.
► Determine combustion limit [ch. 7.4].
► Set excess air using air damper and diffuser setting, whilst observing mixing pressure determined [ch. 7.1.2].

7.3 Concluding work

NOTICE

Oil leakage from oil pressure measuring devices due to constant load
Oil pressure measuring devices could be damaged and cause environmental pollution through leakage.
- ► Remove oil measuring devices once commissioning is complete.

- ► Check control and safety devices.
- ► Check tightness of oil carrying components.
- ► Enter type and serial number into the text box [ch. 3.2].
- ► Enter combustion values and settings in the commissioning record and/or test sheet.
- ► Mount cover on burner.
- ► Inform the operator about the use of the equipment.
- ► Hand the installation and operating manual to the operator and inform him that this should be kept with the appliance.
- ► Point out to operator that the installation should be serviced annually.

7.4 Check combustion

Determine excess air

- ► Slowly close air damper(s) in the relevant operating point, until the combustion limit is reached (soot number approx. 1).
- ► Measure and document O_2 content.
- ► Read air number (λ).

Increase air number to ensure sufficient excess air:
- by 0.15 … 0.20 (equates to 15 … 20 % excess air)
- by more than 0.20 for more difficult conditions, such as:
  - dirty combustion air
  - fluctuating intake temperature
  - fluctuating chimney draught

Example

$$\lambda + 0.15 = \lambda^*$$

- ► Set air number (λ*), do not exceed CO content of 50 ppm.
- ► Measure and document O_2 content.

Check flue gas temperature

- ► Check flue gas temperature.
- ► Ensure that the flue gas temperature complies with the data provided by the boiler manufacturer.
- ► If necessary adjust flue gas temperature, e. g.:
  - Increase burner capacity to avoid condensation in the flue gas ducts, except on condensing units
  - Reduce burner capacity to improve efficiency
  - adjust heat exchanger to the data provided by the manufacturer

Determine flue gas losses

- ► Measure combustion air temperature (t_L) near the air damper(s).
- ► Measure oxygen content (O_2) and flue gas temperature (t_A) at the same time at one point.
- ► Determine flue gas losses using the following formula:

$$q_A = (t_A - t_L) \cdot \left(\frac{A_2}{21 - O_2} + B\right)$$

q_A Flue gas losses [%]

t_A Flue gas temperature [°C]

t_L Combustion air temperature [°C]

O_2 Volumetric content of oxygen in dry flue gas [%]

Fuel factors	Fuel oil
A2	0.68
B	0.007

8 Shutdown

In the event of operational failure:
- ► Switch off burner.
- ► Close fuel shut off devices.

9 Servicing

9.1 Notes on servicing



WARNING

Risk of electric shock
Working on the device when voltage is applied can lead to electric shock.
► Isolate the device from the power supply prior to starting any work.
► Safeguard against accidental restart.



WARNING

Risk of electric shock
Touching the ignition device can lead to electric shock.
► Do not touch ignition device during the ignition process.



CAUTION

Danger of getting burned on hot components
Hot components can lead to burns.
► Do not touch the components.
► Allow components to cool.



CAUTION

Risk of injury from sharp edges
Sharp edges on components can cause injury.
► Wear protective gloves.
► Watch out for sharp edges.



NOTICE

Damage caused by objects in the burner housing
It is possible for objects to fall into the burner housing.
If these objects are not removed, they could damage the burner.
► Following servicing, ensure that there are no objects left in the burner housing.

Servicing must only be carried out by qualified personnel. The combustion plant should be serviced annually. Depending on site conditions more frequent checks may be required.

Components, which show increased wear and tear or whose design lifespan is or will be exceeded prior to the next service should be replaced as a precaution.

The design lifespan of the components is listed in the service plan [ch. 9.2].



Weishaupt recommends a service contract be entered into to ensure that the necessary inspections and maintenance work are carried out.

The following components must only be replaced and must not be repaired:
- Combustion Manager
- Flame sensor
- Actuator
- Oil solenoid valve
- Pressure switch
- Oil nozzle

Prior to every servicing

- ► Inform the operator about the extent of service work to be carried out.
- ► Switch off mains switch of installation and safeguard against accidental reactivation.
- ► Close fuel shut-off devices and secure against being switched on again unexpectedly.
- ► Remove cover.
- ► Unplug boiler control connection plug from combustion manager.

Following servicing

- ► Check tightness of oil carrying components.
- ► Check function of:
  - Ignition
  - Flame monitoring
  - oil pump (pump pressure and suction resistance)
  - Control and safety devices
- ► Check combustion values, if necessary re-adjust the burner.
- ► Enter combustion values and settings in the commissioning record.
- ► Refit cover.

9.2 Service plan

Components	Criteria / design lifespan[1]	Service procedure
Oil nozzle	Soiling / wear	▶ Replace [ch. 9.4] Recommendation: at least every 2 years
Ignition electrode	Soiling	▶ Clean
	Damage / wear	▶ Replace Recommendation: at least every 2 years
Ignition cable	Damage	▶ Replace
Flame tube / diffuser	Soiling	▶ Clean
	Damage	▶ Replace
Oil hose	Damage / oil escaping	▶ Replace [ch. 9.10] Recommendation: every 5 years
Oil solenoid valve	Soundness 250 000 burner starts or 10 years[2]	▶ Replace oil pump [ch. 9.10]
Oil pump filter	Soiling	▶ Clean [ch. 9.13]
Fan wheel	Soiling	▶ Clean
	Damage	▶ Replace [ch. 9.11]
Air duct	Soiling	▶ Clean
Air damper	Soiling	▶ Clean
Combustion Manager	250 000 burner starts or 10 years[2]	▶ Replace
Flame sensor / flame monitor	Soiling	▶ Clean
	Damage 250 000 burner starts or 10 years[2]	▶ Replace

[1] The specified design lifespan applies for typical use in heating, hot-water and steam systems as well as for thermal process systems to EN ISO 13577-2.
[2] If a criterion is reached, carry out maintenance measures.

9.3 Service position

Observe notes on servicing [ch. 9.1].

- ► Remove bolts ①.
- ► If necessary remove oil hoses.

If the burner is placed into service position B:

- ► If necessary unplug actuator plug.
- ► Place burner into service position required.

Service position A

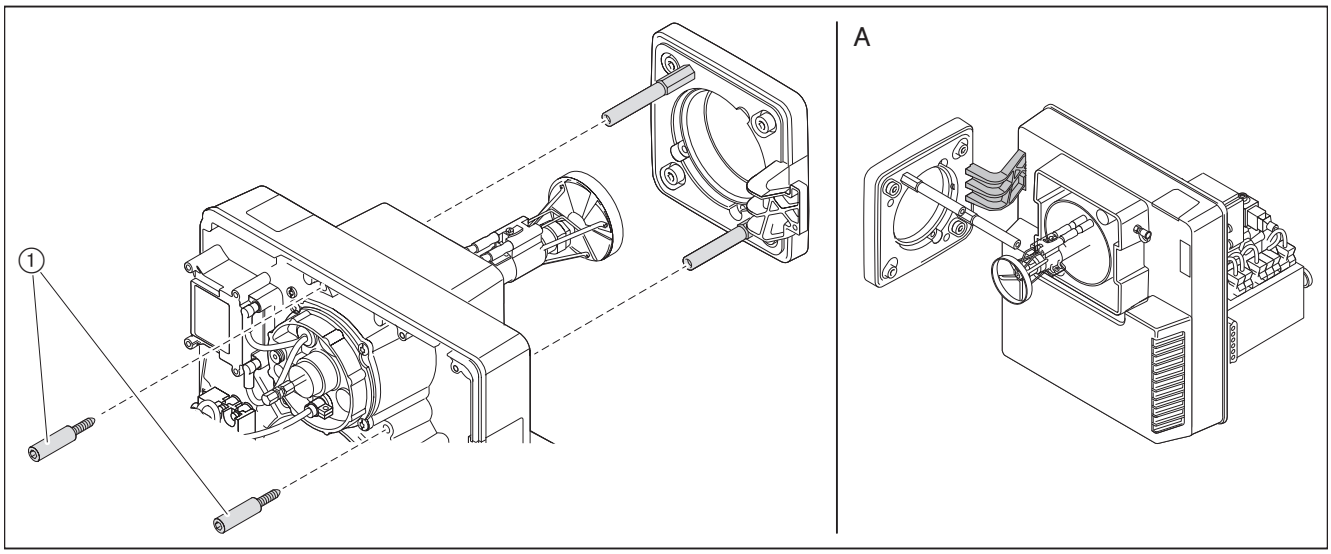

Service position B

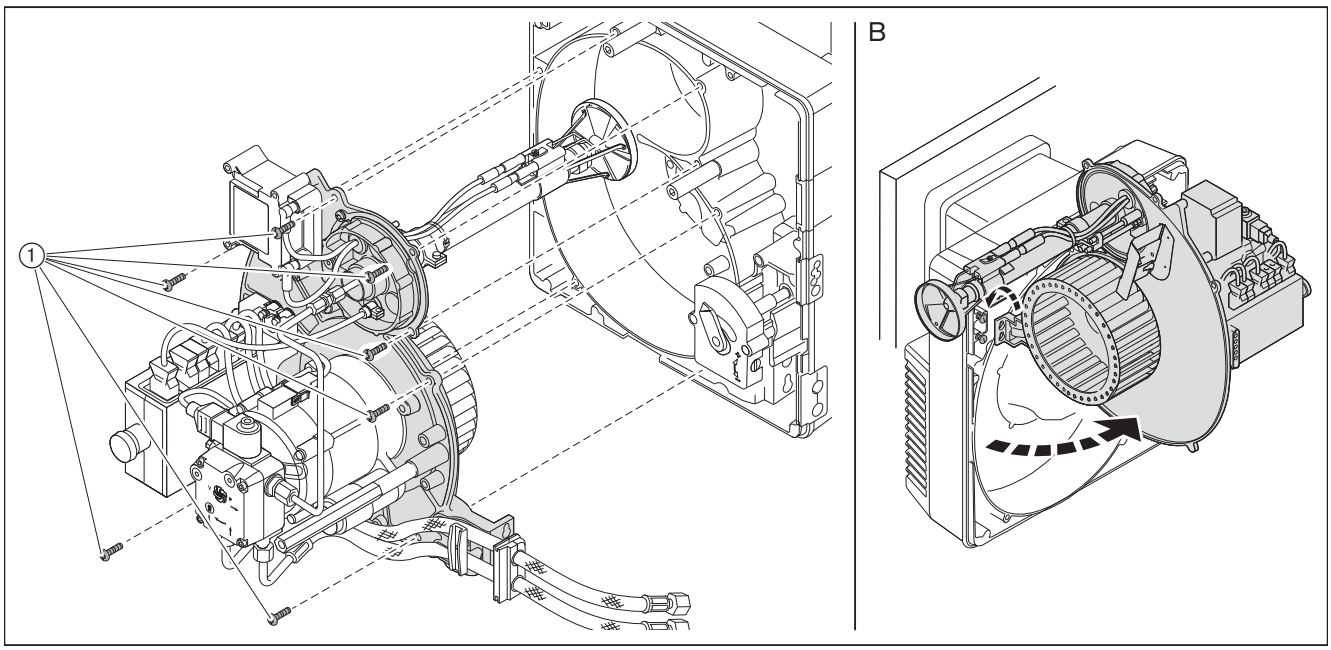

9.4 Replace nozzle

Observe notes on servicing [ch. 9.1].

Do not clean nozzles, always fit new nozzles.

- ► Place burner into service position A [ch. 9.3].
- ► Unplug ignition cable ④.
- ► Undo screw ① and remove diffuser.
- ► Counter-hold on the nozzle body ③ using a spanner and remove nozzle ②.
- ► Fit new nozzle ensuring it is seated tightly.
- ► Refit diffuser in reverse order.
- ► Set nozzle distance [ch. 9.7]
- ► Set ignition electrodes [ch. 9.5]

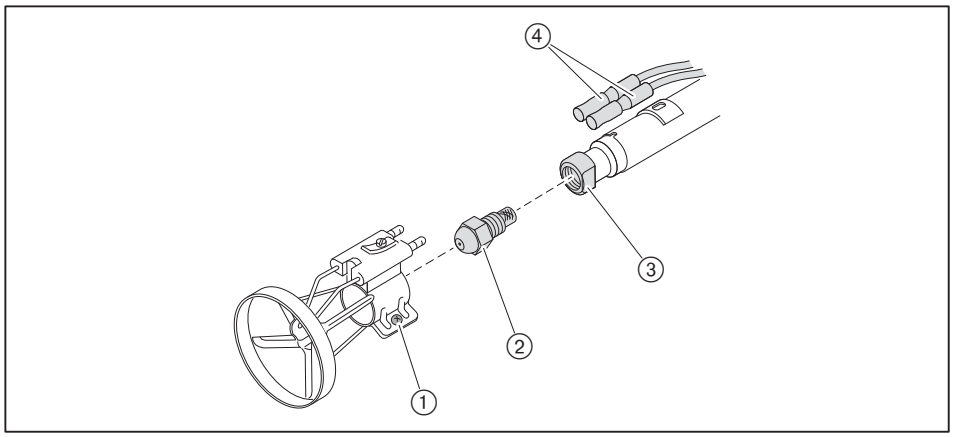

9.5 Set ignition electrodes

Observe notes on servicing [ch. 9.1].

The ignition electrodes must not touch the nozzle's atomising spray cone.

- ► Place burner into service position A [ch. 9.3].
- ► Check distance of ignition electrodes.
- ► If necessary adjust ignition electrodes by slightly bending.

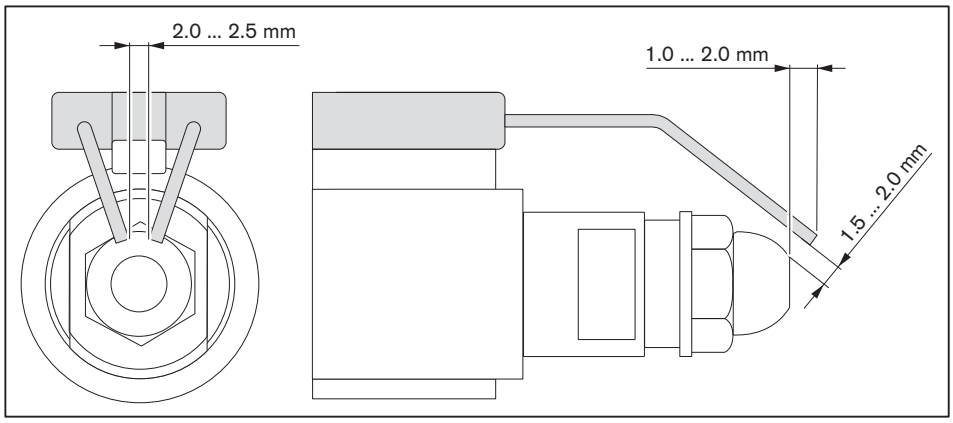

9.6 Remove mixing head

Observe notes on servicing [ch. 9.1].

- ▶ Unplug ignition cable ①.
- ▶ Remove oil line ③.
- ▶ Remove flame sensor ④.
- ▶ Undo screws ②.
- ▶ Turn mixing head to the left up to the recess and remove.

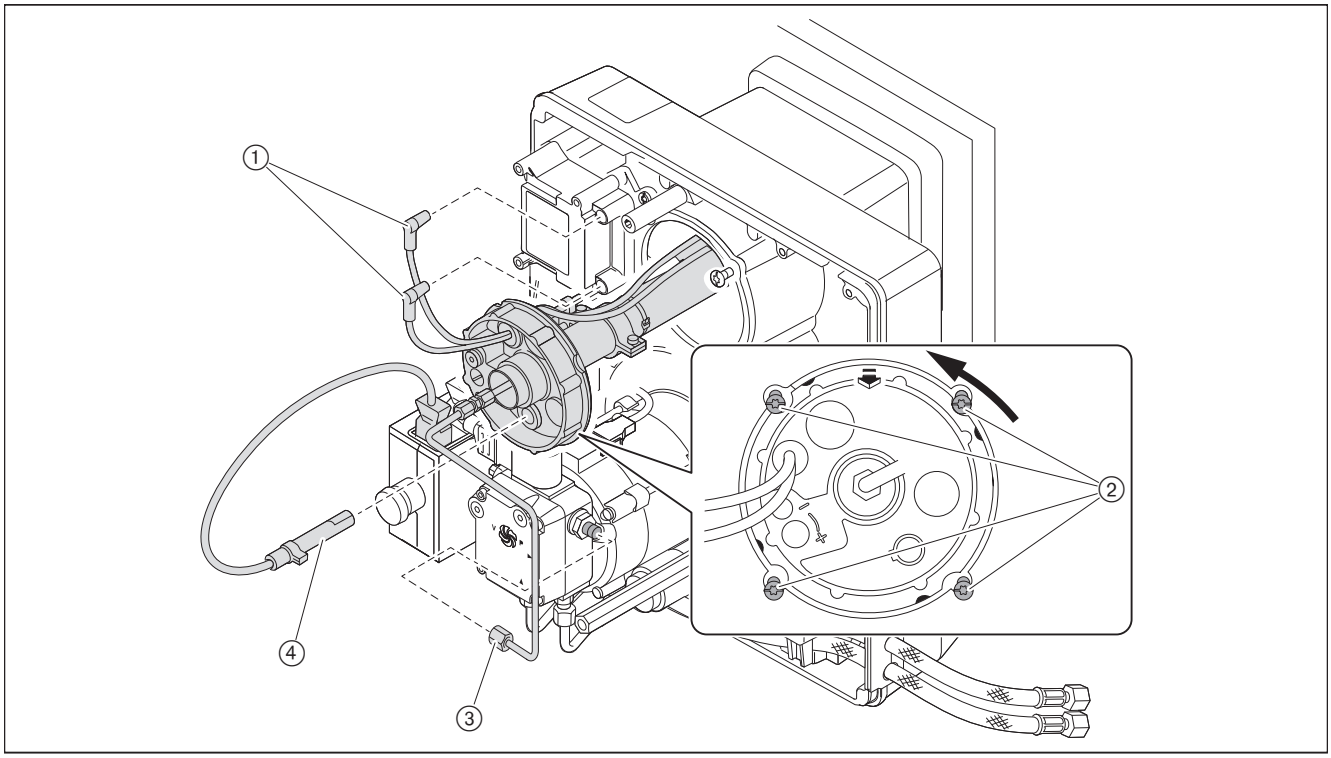

9.7 Set mixing head

Observe notes on servicing [ch. 9.1].

Set nozzle distance

- ► Place burner into service position A [ch. 9.3].
- ► Insert setting gauge and check dimension A (3.5 mm).

If the value measured deviates from dimension A:

- ► Undo screw ①.
- ► Adjust nozzle body ② until dimension A is reached.
- ► Tighten screw ①.

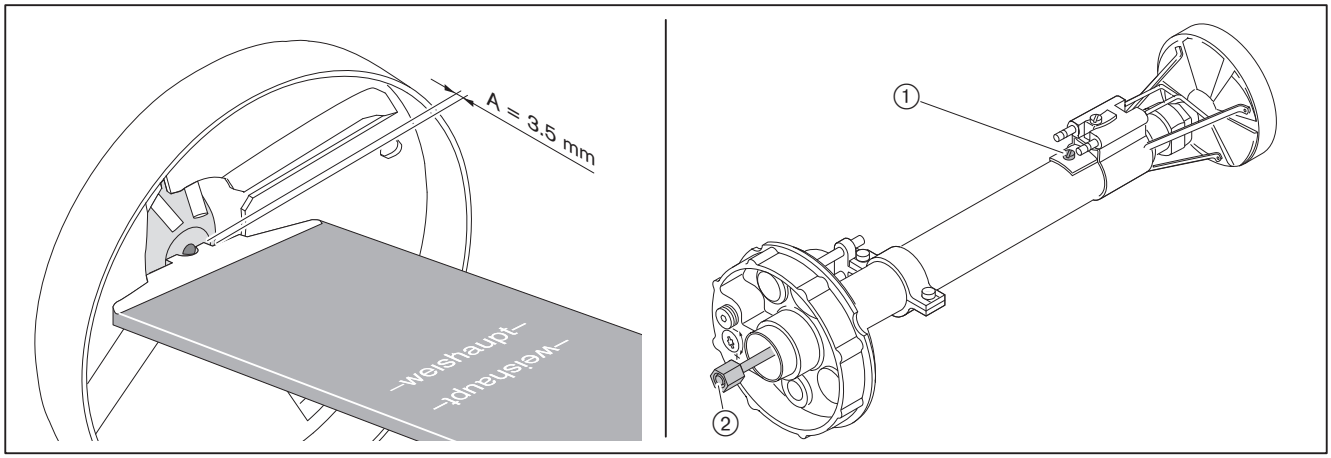

Check basic setting

Dimension S1 can only be checked when the burner is mounted to a boiler door, which is hinged open.

- ► Hinge open boiler door or if necessary remove mixing head [ch. 9.6].
- ► Turn setting screw ① until the indicating bolt ② is flush with the nozzle assembly cover (dimension X = 0 mm).
- ► Check dimension S1 and/or dimension Lx.
- ► Set dimension S1 and/or dimension Lx by turning setting screw ①.
- ► Remove plug from indicating bolt ②.
- ► Turn indicating bolt until it is flush with the nozzle assembly cover (dimension X = 0 mm).
- ► Replace plug.

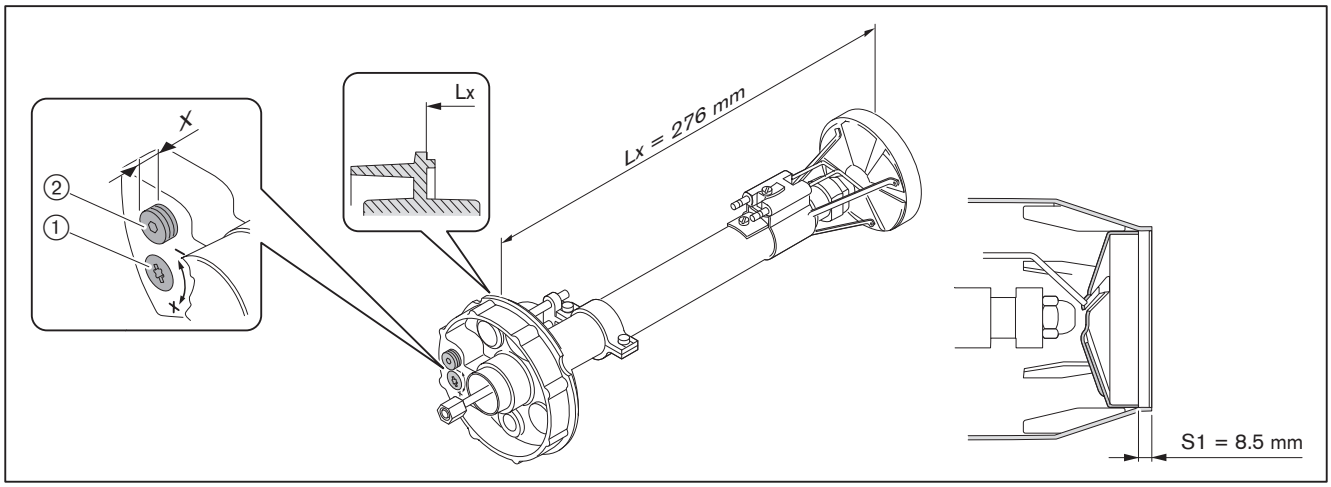

9.8 Removing the air regulator

Observe notes on servicing [ch. 9.1].

- ► If necessary unplug actuator plug ⑤.
- ► Place burner into service position A [ch. 9.3].
- ► Remove bolts ①.
- ► Remove intake housing ③.
- ► Remove bolts ④.
- ► Remove air regulator ②.

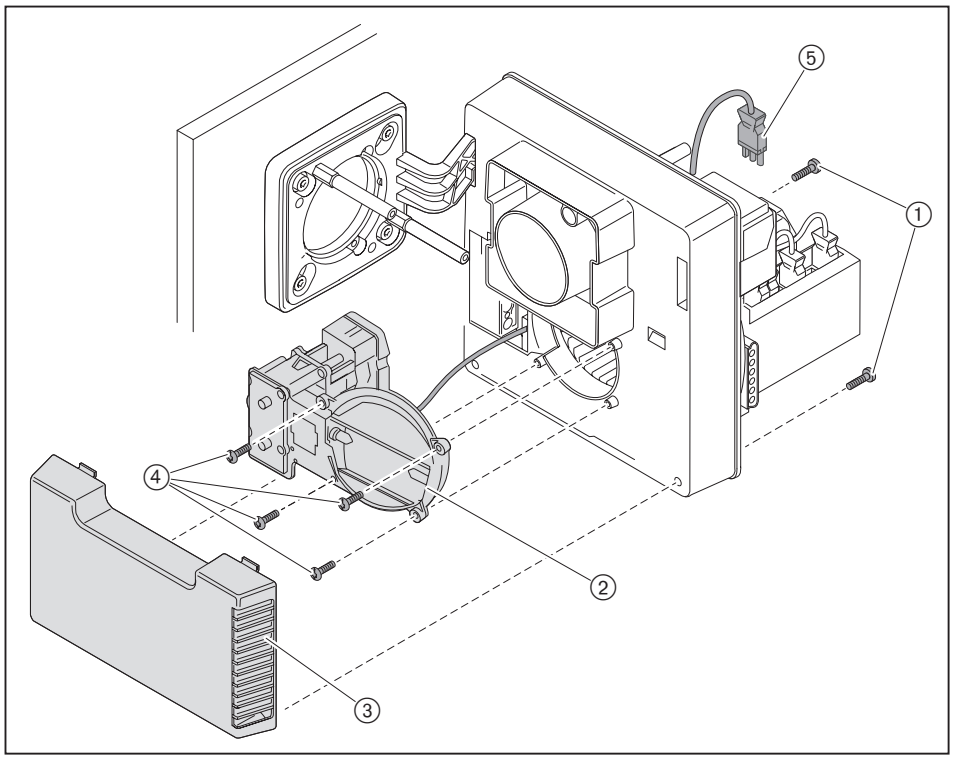

9.9 Removing and refitting angle drive

Observe notes on servicing [ch. 9.1].

Removing

- ► Remove actuator ③ or manual adjuster ⑨.
- ► Remove frame ④.
- ► Remove angle drive ⑤.

Refitting

- ► Remove intake housing [ch. 9.8].
- ► Open air damper ⑥ until position ⑦ has been reached and hold tight.
- ► Fit angle drive to shaft.
- ► Secure angle drive.
- ► Mount intake housing [ch. 9.8].
- ► Fit frame ④.
- ► For manual adjustment, record the air damper position and turn back to zero.
- ► Turn indicator ① to CLOSED position and hold.
- ► Place actuator or manual adjuster with shaft ⑧ into the star shaped groove ② and secure.
- ► For manual adjustment, reset the air damper to the position recorded.

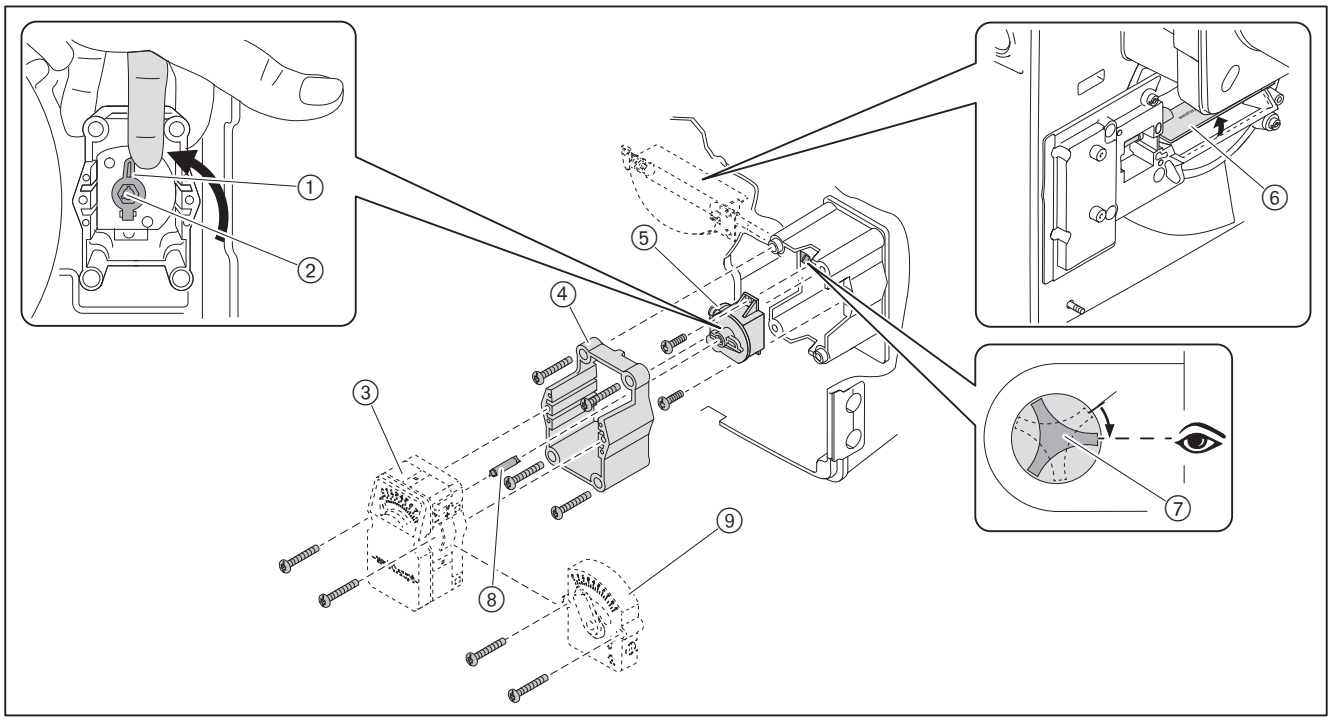

9.10 Removing and refitting oil pump

Observe notes on servicing [ch. 9.1].

Removing

- ► Close fuel shut off devices.
- ► Unplug plug ①.
- ► Remove oil hoses ⑤.
- ► Remove oil line ④.
- ► Undo screws ② and remove oil pump.

Refitting

- ► Install oil pump in reverse order and:
  - ensure correct alignment of coupling ③
  - ensure that the oil hoses are correctly connected to the supply and return lines

NOTICE

Damage to the oil pump due to incorrect connection
Mixing up supply and return can damage the oil pump.
- ► Ensure correct connection of oil hoses to the supply and return of the pump.

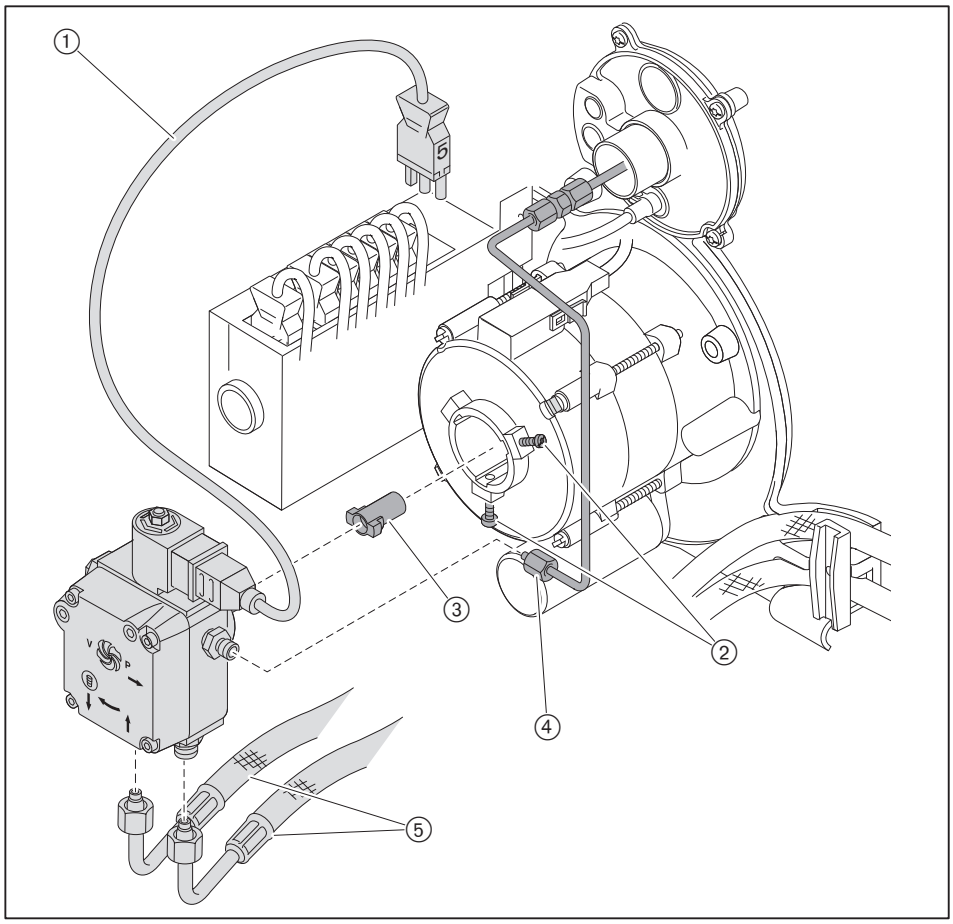

9.11 Removing and refitting fan wheel

Observe notes on servicing [ch. 9.1].

Personal protective equipment must be observed [ch. 2.3.1].

Removing

- ► Place housing cover into service position B [ch. 9.3].
- ► Remove grub screw ① and remove fan wheel.

Refitting

- ► Refit fan wheel in reverse order and:
  - ensure correct alignment on the motor shaft ②
  - screw in new grub screw ①
  - turn fan wheel to ensure it moves freely

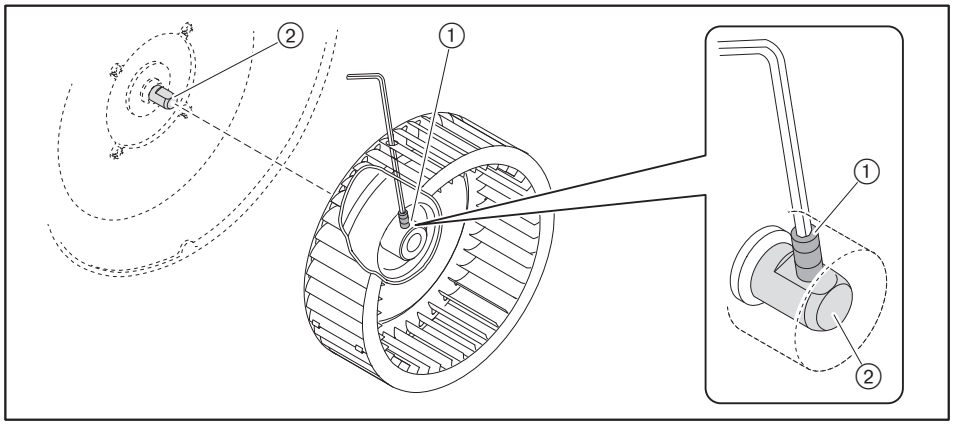

9.12 Remove burner motor

Observe notes on servicing [ch. 9.1].

- ► Remove the oil pump [ch. 9.10].
- ► Remove fan wheel [ch. 9.11].
- ► Unplug plug ①.
- ► Hold motor and remove screws ②.
- ► Remove motor.

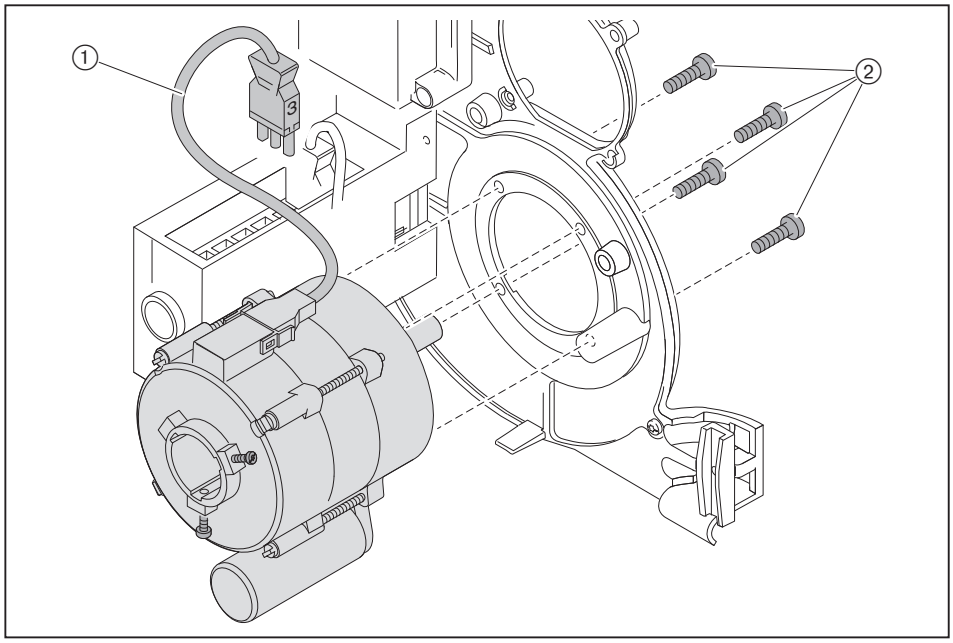

9.13 Removing and refitting oil pump filter

Observe notes on servicing [ch. 9.1].

Removing

- ► Close fuel shut off devices.
- ► Remove bolts ①.
- ► Remove pump cover.
- ► Replace filter ③ and gaskets ②.

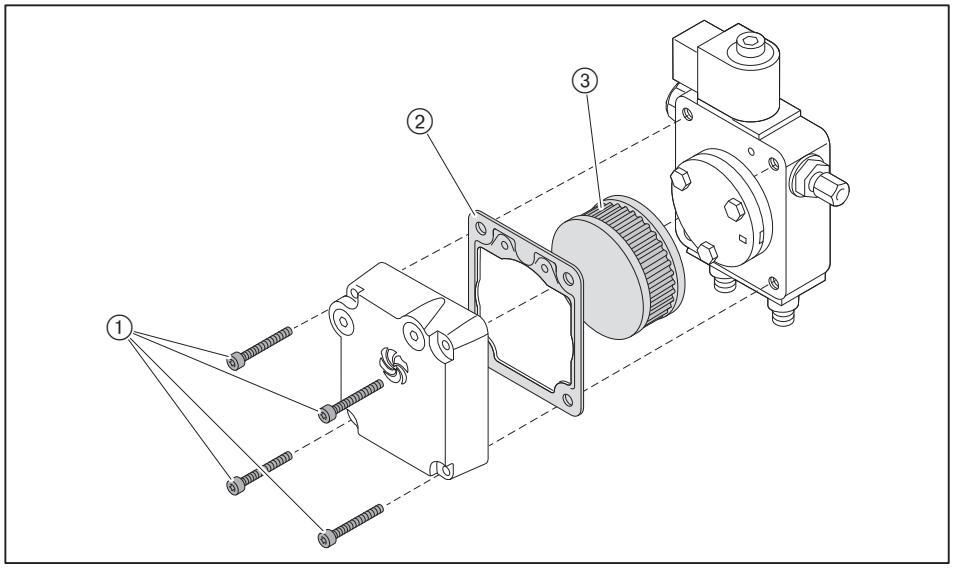

Refitting

- ► Refit filter in reverse order ensuring sealing surfaces are clean.

9.14 Replacing the fuse

Observe notes on servicing [ch. 9.1].

- ► Remove all plugs from the combustion manager.
- ► Remove screws from the combustion manager.
- ► Remove combustion manager.
- ► Replace fuse (T6.3H, IEC 127-2/5).

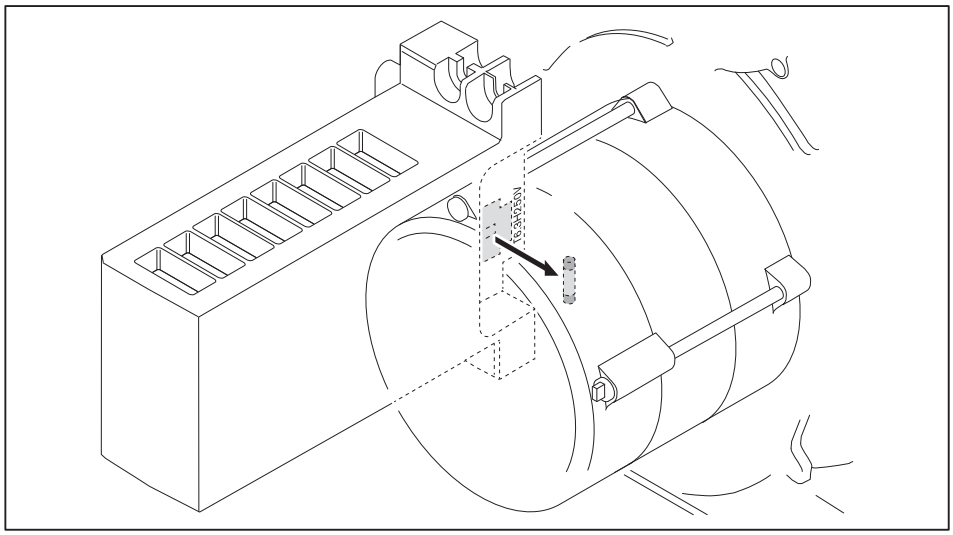

10 Troubleshooting

10.1 Procedures for fault conditions

The combustion manager recognises irregularities of the burner and indicates these with the illuminated push button.

The following conditions can occur:
- illuminated push button off [ch. 10.1.1]
- illuminated push button red [ch. 10.1.2]
- illuminated push button flashes [ch. 10.1.3]

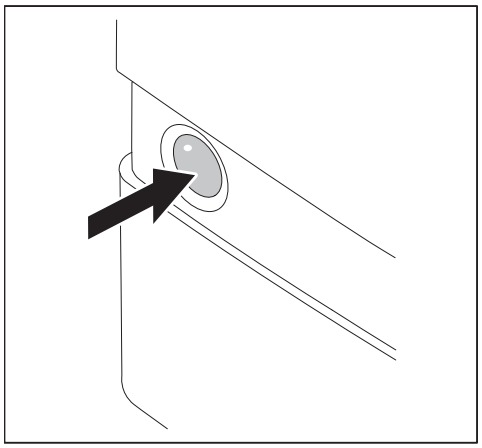

More diagnostic options via the BCI interface, with:
- The display and operating unit (service package operating unit W-FM05/10)
- Interface module OCI410 with software ACS410
- Data protocol converter OCI460 (building management system)

10.1.1 Illuminated push button off

The following faults may be corrected by the operator:

Fault	Cause	Rectification
Burner not operating	External fuse has tripped(1	▶ Check fuse.
	Heating switch is set to Off	▶ Switch on heating switch.
	Temperature limiter or pressure limiter on heat exchanger has triggered(1	▶ Reset temperature limiter or pressure limiter on heat exchanger.
	Low water safety interlock on heat exchanger has triggered(1	▶ Top up water. ▶ Reset low water safety interlock on heat exchanger.
	Temperature regulator or pressure regulator on heat exchanger has been set incorrectly	▶ Adjust temperature regulator or pressure regulator on heat exchanger.
	Boiler or heating circuit control is not functioning or has not been set correctly	▶ Check function and setting of boiler or heating circuit control.

(1 Notify your heating contractor or Weishaupt Customer Service if the problem occurs repeatedly.

10.1.2 Illuminated push button red

A burner fault has occurred. The burner is in lockout. Prior to resetting, the error code can be called up and used to evaluate the cause of the fault.

Read error codes

Only 5 seconds after a fault occurred can it be analysed and read.

- ► Press illuminated push button for 5 seconds.
- ✓ Illuminated push button briefly lights up orange.
- ✓ Illuminated push button flashes red.
- ► Count the flashing signals between the flashing pauses and note down.
- ► Rectify cause of fault, see table.

Reset



WARNING

Danger resulting from incorrect fault repair
Incorrect fault repair can cause damage to the equipment and injure personnel.
- ► Do not carry out more than 2 lockout resets successively.
- ► Faults must be rectified by qualified personnel.

- ► Press illuminated push button for 1 second.
- ✓ Red signal extinguishes.
- ✓ Burner has been reset.

Error codes with lockout

Faults must only be rectified by qualified personnel:

Fault codes	Fault	Cause	Rectification
Flashing 2 times No flame, end of safety time	Oil pump supplies no oil	Oil supply leaking	▶ Check oil supply
		Anti siphon valve does not open	▶ Check valve, if necessary replace
		Shut off device closed	▶ Open shut off device
		Pre-filter strainer soiled	▶ Replace pre-filter strainer
		Oil pump defective	▶ Replace oil pump [ch. 9.10]
	No oil throughput at the nozzle	Oil nozzle blocked	▶ Replace nozzle
	No ignition	Ignition electrode dirty or wet	▶ Clean ignition electrode
		Ignition electrode spark gap too big or short circuited	▶ Set ignition electrode [ch. 9.5]
		Ceramic insulator defective	▶ Replace ignition electrodes
		Ignition cable defective	▶ Replace ignition cable
		Ignition unit defective	▶ Replace ignition unit
	Solenoid valve does not open	Coil defective	▶ Replace coil
	Combustion manager does not detect a flame signal	Flame sensor soiled	▶ Clean flame sensor
		Flame sensor defective	▶ Replace flame sensor
		Illumination insufficient	▶ Check burner setting
	Burner motor does not run	Oil pump seized	▶ Replace oil pump [ch. 9.10]
		Capacitor defective	▶ Replace capacitor
		Burner motor defective	▶ Replace burner motor [ch. 9.12]
	No flame formation despite ignition and oil supply	Nozzle distance incorrect	▶ Check nozzle distance, adjust if necessary [ch. 9.7]
		Mixing pressure too high	▶ Check mixing pressure [ch. 7.1.2]
Flashing 4 times Flame simulation/ extraneous light	Flame signal prior to or after operation	Extraneous light source present	Extraneous light detection > 12 µA. ▶ Find and eliminate extraneous light source
		Flame sensor defective	▶ Check flame sensor, if necessary replace
	Flame formation during pre-purge	Solenoid valve leaking	▶ Replace oil pump [ch. 9.10]

10 Troubleshooting

Faults must only be rectified by qualified personnel:

Fault codes	Fault	Cause	Rectification
Flashing 7 times Flame failure during operation	Flame has failed	Oil supply leaking	▶ Check oil supply
		Suction resistance in front of pump too high	
		Oil nozzle soiled	▶ Replace oil nozzle
	Flame signal insufficient	Burner setting incorrect	▶ Check burner setting ▶ Check flame signal [ch. 7.1.1]
		Flame sensor soiled	▶ Clean flame sensor
		Flame sensor defective	▶ Check flame sensor, if necessary replace
Flashing 8 times Release contact fault	Actuator limit switch does not close	Actuator defective	▶ Check actuator, replace if necessary
	Contact X3:2 not closed	Bridging plug No. 2 is missing	▶ Plug in bridging plug No. 2
	Contact X3:12 not closed	Bridging plug No. 12 is missing	▶ Plug in bridging plug No. 12
Flashing 10 times Combustion manager fault	Burner does not start	Parameters have been changed	▶ Reset burner [ch. 10.1.2]
		Combustion manager defective	▶ Reset burner [ch. 10.1.2], if fault reoccurs replace combustion manager
Flashing 15 times	Manual shutdown	Manual lockout ABE	▶ Reset burner

10.1.3 Illuminated push button flashes

An irregularity is present. The burner does not go to lockout. Once the fault has been rectified, the error code ceases.

Error codes without lockout

Faults must only be rectified by qualified personnel:

Fault codes	Cause	Rectification
flashing green/red	Extraneous light prior to heat demand	▶ Find and eliminate extraneous light source
Flashing red/orange with pause	Excess voltage	▶ Check voltage supply
Flashing orange/red	Low voltage	▶ Check voltage supply
	Internal unit fuse (F7) faulty	▶ Replace fuse [ch. 9.14]
	Combustion manager fault	▶ Replace combustion manager
Flashing green	Flame sensor soiled	▶ Clean flame sensor
	Flame sensor defective	▶ Replace flame sensor
	Burner operation with weak flame signal (< 45 µA)	▶ Adjust burner whilst observing the recommended flame signal [ch. 7.1.1]
Glimmering red	OCI mode activated (not used)	▶ Press illuminated push button for more than 5 seconds ✓ Combustion manager changes to operating mode

10.2 Operating problems

Faults must only be rectified by qualified personnel:

Observation	Cause	Rectification
Poor start behaviour of burner	Mixing pressure too high	▸ Correct mixing pressure
	Ignition electrodes set incorrectly	▸ Set ignition electrodes [ch. 9.5]
	Mixing head set incorrectly	▸ Set mixing head [ch. 9.7]
Oil pump makes severe mechanical noise	Oil pump sucks air	▸ Ensure oil supply is tight
	Suction resistance in oil line too high	▸ Clean filter ▸ Check oil supply
Oil nozzle atomisation uneven	Nozzle blocked/soiled	▸ Replace nozzle
	Nozzle worn	
Flame tube/diffuser has heavy soot deposit	Oil nozzle defective	▸ Replace nozzle
	Mixing head set incorrectly	▸ Set mixing head [ch. 9.7]
	Incorrect combustion air quantity	▸ Adjust burner
	Boiler room ventilated insufficient	▸ Ensure sufficient boiler room ventilation
	Wrong oil nozzle	▸ Check nozzle type
	Nozzle distance incorrect	▸ Check nozzle distance, adjust if necessary [ch. 9.7]
Combustion pulsating and/or burner booming	Mixing head set incorrectly	▸ Set mixing head [ch. 9.7]
	Incorrect combustion air quantity	▸ Adjust burner
	Wrong oil nozzle	▸ Check nozzle type
CO content too high	Nozzle distance too big	▸ Check nozzle distance, adjust if necessary [ch. 9.7]
Stability problems	Nozzle distance incorrect	▸ Check nozzle distance, adjust if necessary [ch. 9.7]
	Wrong oil nozzle	▸ Check nozzle type
Restart after flame failure	Burner repeats start process	▸ See error codes flashing 7 times

11 Technical documentation

11.1 Conversion table unit of pressure

Bar	Pascal			
	Pa	hPa	kPa	MPa
0.1 mbar	10	0.1	0.01	0.00001
1 mbar	100	1	0.1	0.0001
10 mbar	1 000	10	1	0.001
100 mbar	10 000	100	10	0.01
1 bar	100 000	1 000	100	0.1
10 bar	1 000 000	10 000	1 000	1

11.2 Wiring diagram

For special version observe wiring diagram supplied.

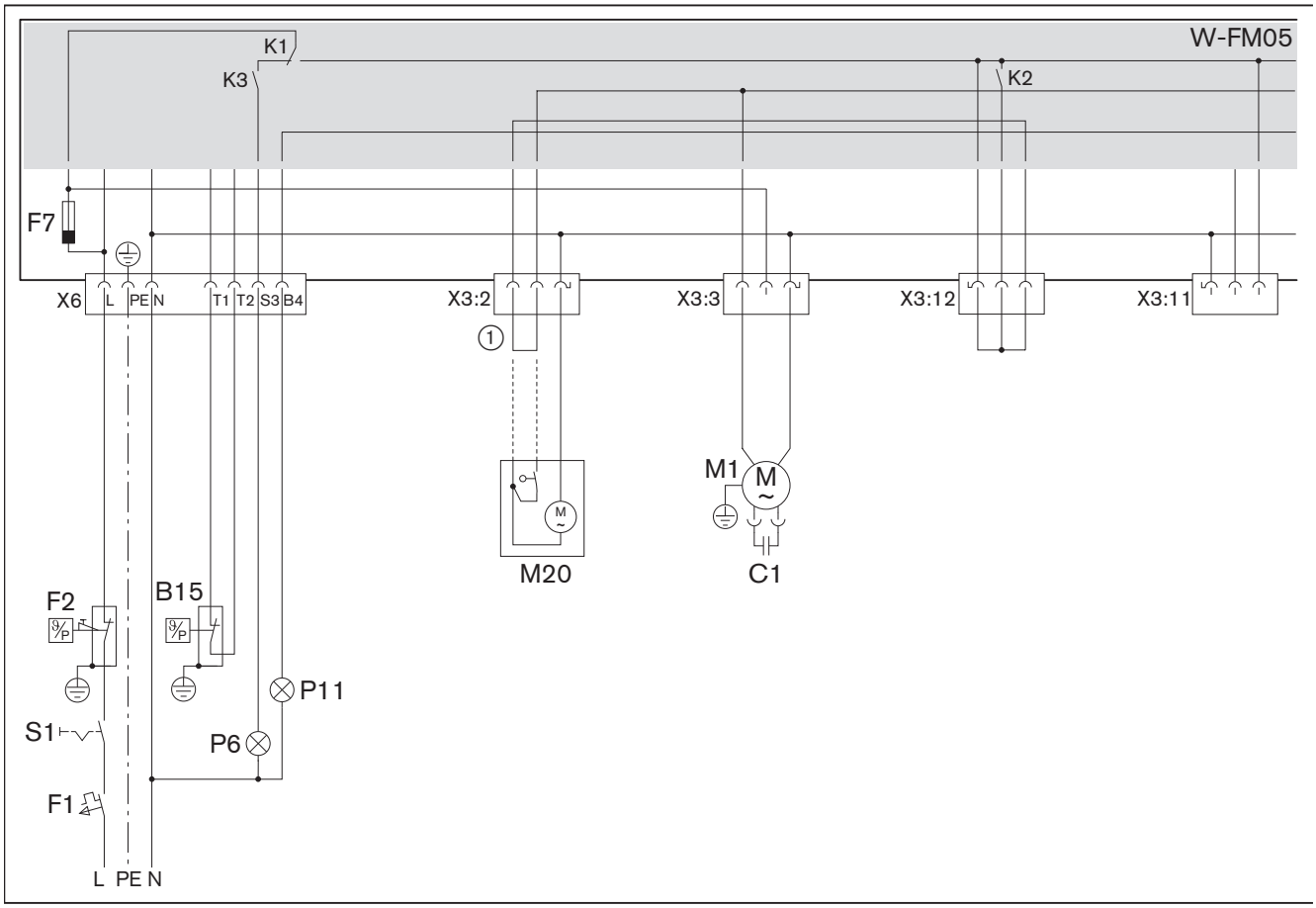

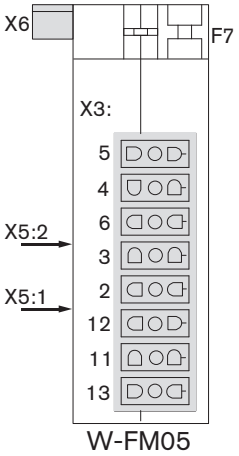

B15	Temperature or pressure regulator
C1	Motor capacitor
F1	External fuse
F2	Temperature or pressure limiter
F7	Internal unit fuse (T6.3H, IEC 127-2/5)
M1	Burner motor
M20	Air damper actuator (optional)
P6	Control lamp lockout (optional)
P11	Control lamp operation (optional)
S1	Operating switch
①	Bridge for air regulator with manual adjustment

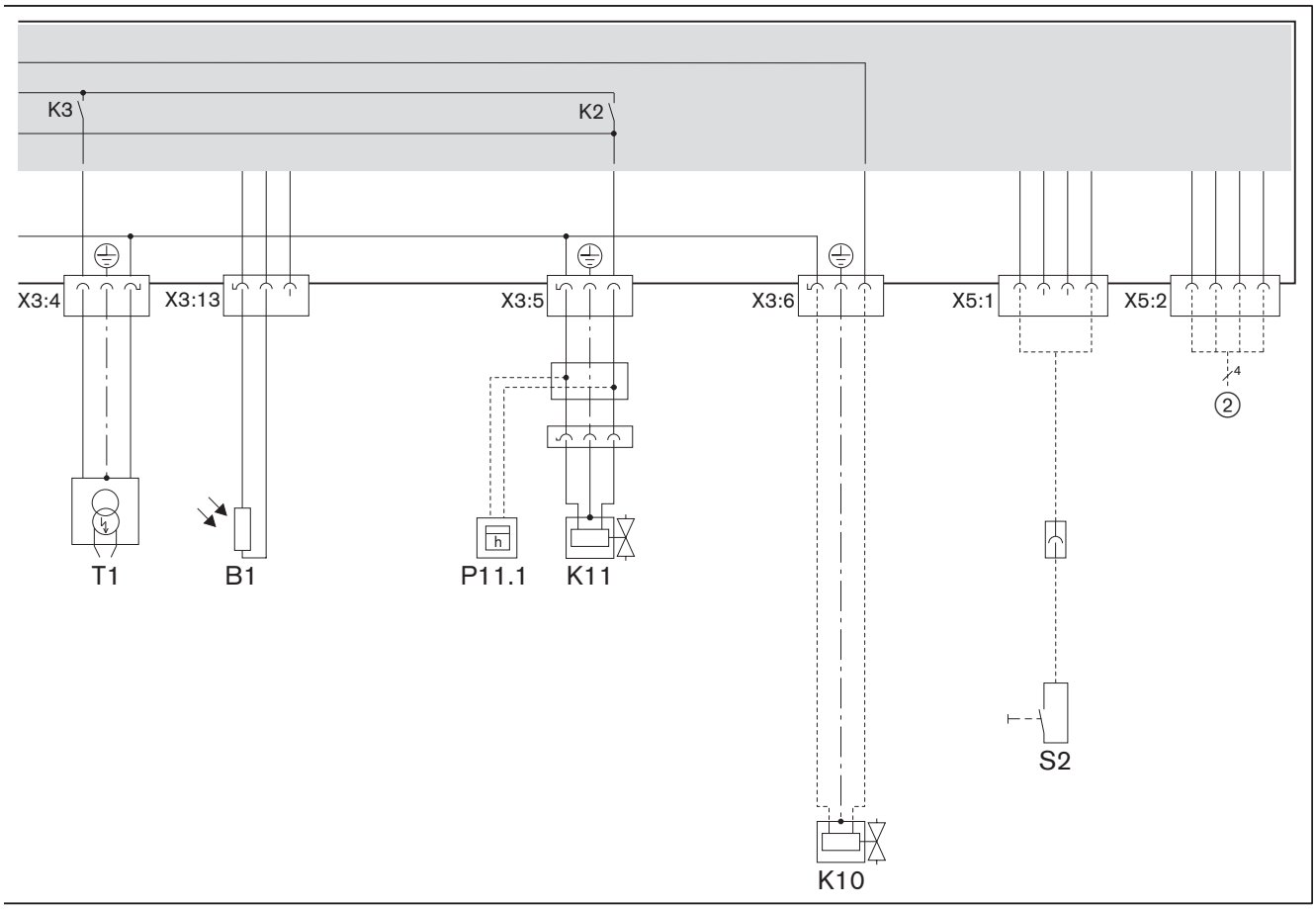

B1	Flame sensor
K10	Anti siphon valve (optional)
K11	Solenoid valve
P11.1	Hours counter (optional)
S2	Remote reset (optional)
T1	Ignition unit
②	Bus interface BCI (optional): ▪ The display and operating unit (service package operating unit W-FM05/10) ▪ Interface module OCI410 with software ACS410 ▪ Data protocol converter OCI460 (building management system)

12 Project planning

12.1 Oil supply

EN 12514-2, DIN 4755, Tyrol, work sheet DWA-A 791 (TRwS 791) and observe the local regulations.

General information relating to the oil supply

- Do not use cathode protection system with steel tanks.
- With oil temperatures < 5 °C the separation of paraffin can cause oil lines, oil filters and nozzles to become blocked. Avoid placing oil tanks and pipelines in areas subject to frost.
- The oil supply should be installed in such a way that the oil hoses can be connected free of tension.
- Fit oil filter in front of pump, maximum mesh aperture 70 µm.

Suction resistance and supply pressure

NOTICE

Pump damage due to excessive suction resistance
A suction resistance greater than 0.4 bar can damage the pump.
► Reduce suction resistance – or – install oil supply pump or suction unit, whilst observing the maximum supply pressure at the oil filter.

The suction resistance depends on:
- suction line length and diameter
- pressure loss of oil filter and other components
- lowest oil level in the oil storage tank (max 3.5 m below the oil pump)

If an oil feeder pump is installed:
- max 1.5 bar flow pressure at oil filter
- max 0.7 bar flow pressure upstream of automatic de-aerator

Elevated oil level

- If the suction line is leaking the tank can be siphoned dry. An electric anti siphon valve ① can prevent this.
- Observe manufacturers instructions regarding pressure loss caused by anti siphon valve.
- The anti siphon valve must close with a delay and show a pressure relief towards the oil storage tank.

Maintain height differences:
- max 4.6 m between oil level and anti siphon valve
- on single pipe system max 8 m between anti siphon valve and automatic de-aerator
- on two pipe system max 20 m between anti siphon valve and oil pump

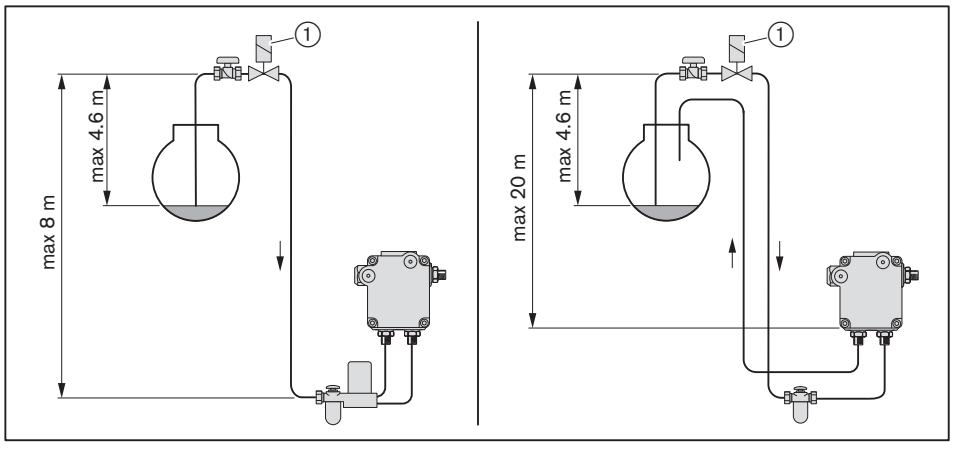

Single pipe oil supply

NOTICE

Damage to the oil pump due to incorrect connection
Mixing up supply and return can damage the oil pump.
► Ensure correct connection of oil hoses to the supply and return of the pump.

On single pipe systems, an automatic de-aerator must be fitted in front of the oil pump.

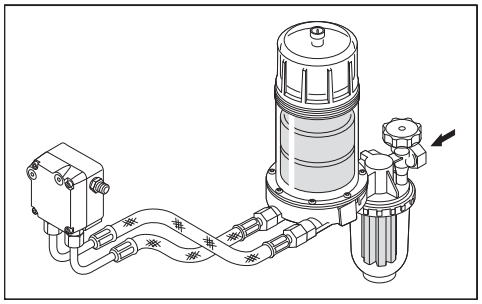

Two pipe system

In a two pipe system the oil pump is vented automatically.

Ring main operation

Weishaupt recommends the use of a ring main when operating several burners.

12.2 Continuous running fan or post-purge

WARNING

Fire hazard due to failure of the combustion air fan
Failure of the combustion air fan (e.g. due to a power failure or defective motor) during operation with continuous running fan or increased post-purge may result in back radiation or hot flue gases flowing back into the burner housing. This could cause a fire.

If fail-safe continuous ventilation or post-purge is required, take appropriate measures, such as:
► installing compressed air flushing on site with:
- sufficiently large compressed air tank
- normally open compressed air valve

13 Spares

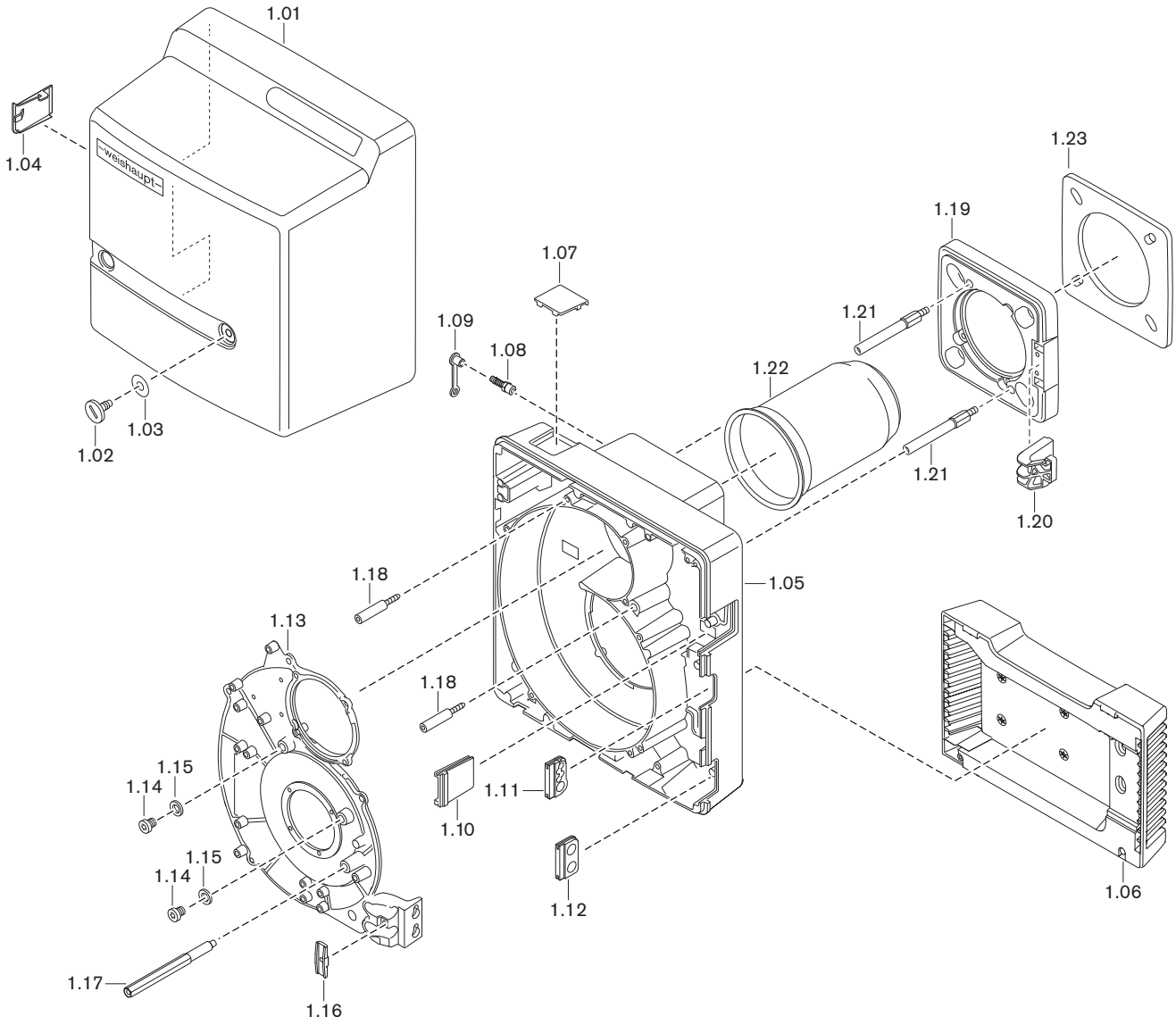
1.01
1.04
1.02
1.03
1.07
1.09
1.08
1.22
1.23
1.19
1.21
1.21
1.20
1.18
1.05
1.13
1.18
1.15
1.14
1.15
1.14
1.11
1.10
1.12
1.06
1.17
1.16

Pos.	Description	Order No.
1.01	Cover complete	241 110 01 112
1.02	Screw M8 x 15	142 013 01 157
1.03	Washer 7 x 18	430 016
1.04	Cover	241 210 01 127
1.05	Burner housing	241 110 01 307
1.06	Intake housing complete	241 110 01 082
	– Screw 4 x 30 Torx-Plus	409 325
1.07	View port on hours counter cover	241 210 01 197
1.08	Treaded socket R⅛" GES6	453 017
1.09	Protective cap DN 6 SELF 50/2 CF	232 300 01 047
1.10	Housing cover	241 110 01 177
1.11	Grommet for connection cable	241 200 01 247
1.12	Grommet for oil hose	241 400 01 177
1.13	Housing cover	241 110 01 317
1.14	Screw G⅛A DIN 908	409 004
1.15	Sealing ring 10 x 13.5 x 1.5 DIN 7603	441 033
1.16	Bracket for oil hose and cable	241 400 01 367
1.17	Stay bolt cover	241 210 01 207
1.18	Screw M6 burner housing	241 110 01 297
1.19	Burner flange	241 110 01 357
	– Screw ISO 4762 M8 x 30- 8.8	402 517
	– Washer 8.4 DIN 433	430 504
1.20	Support bracket for service position	241 110 01 067
1.21	Stay bolt for burner flange	241 050 01 187
1.22	Flame tube	
	– Standard	241 110 14 022
	– extended by 100 mm*	240 110 14 012
	– extended by 200 mm*	240 110 14 022
	– extended by 300 mm*	240 110 14 032
1.23	Flange gasket	241 110 01 107

* Only in conjunction with combustion head extension.

13 Spares

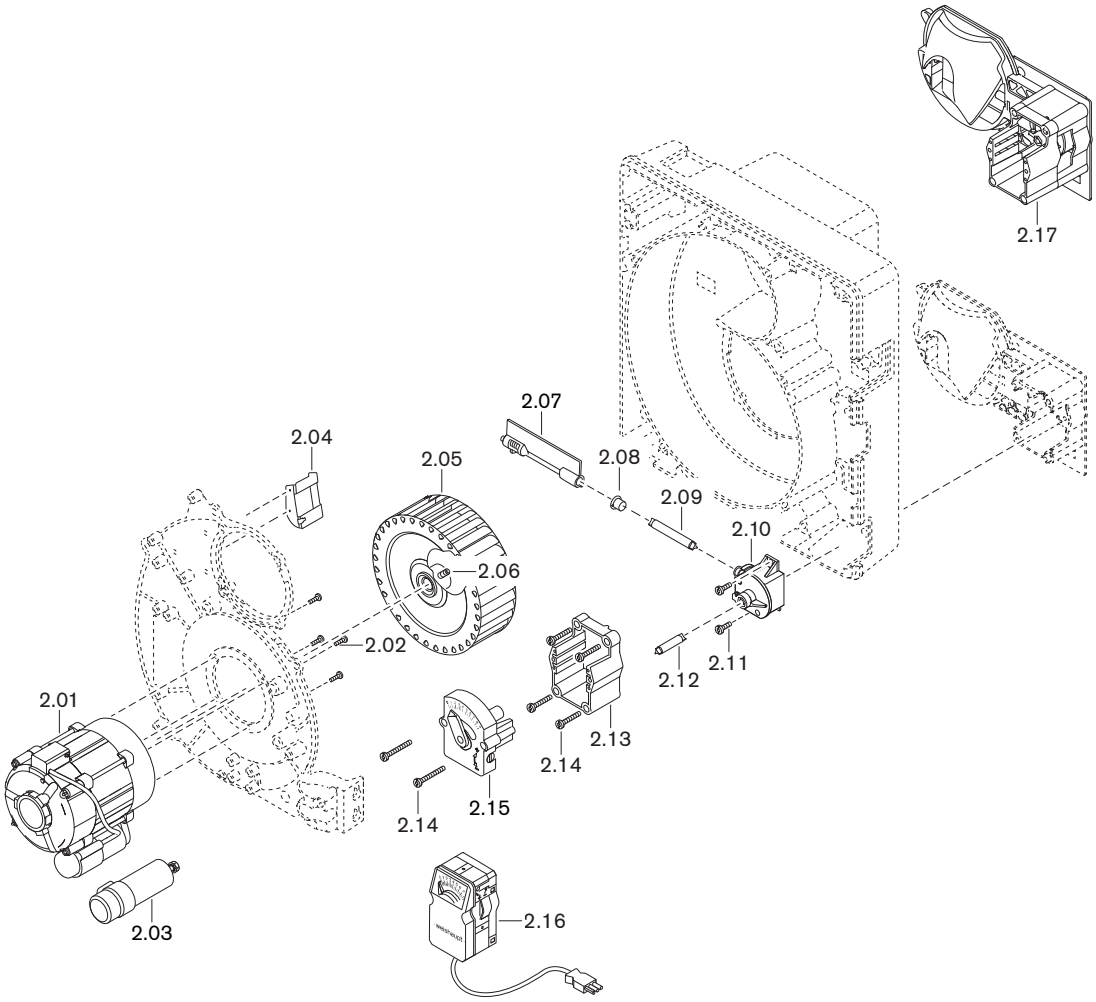
2.17
2.07
2.04
2.05
2.08
2.09
2.10
2.06
2.02
2.01
2.12
2.11
2.13
2.14
2.15
2.14
2.16
2.03

Pos.	Description	Order No.
2.01	Motor ECK03/H-2 230V 50Hz	652 110
2.02	Screw M4 x 10 Torx-Plus	409 323
2.03	Capacitor 5.0 µF 420V, AC, DB	713 474
2.04	Air guide	241 110 01 267
2.05	Fan wheel TLR 152 x 47 -L S1 50 Hz	241 110 08 042
2.06	Grub screw M6x8 w. ann. cut. edge (Tuflok)	420 549
2.07	Air damper complete	241 110 02 102
2.08	Bearing for air damper shaft	241 110 02 107
2.09	Shaft air damper - angle drive	241 210 02 057
2.10	Angle drive spring 1	241 110 02 052
2.11	Screw 4 x 12 Torx-Plus Remform	409 320
2.12	Shaft angle drive - actuator	241 400 02 157
2.13	Frame for actuator	241 210 02 037
2.14	Screw 4 x 30 Torx-Plus Delta PT	409 325
2.15	Manual adjustment	241 050 02 022
2.16	Actuator W-St02/2 220-240V 50Hz	651 049
2.17	Air regulator W10D spring 1	241 110 02 082

13 Spares

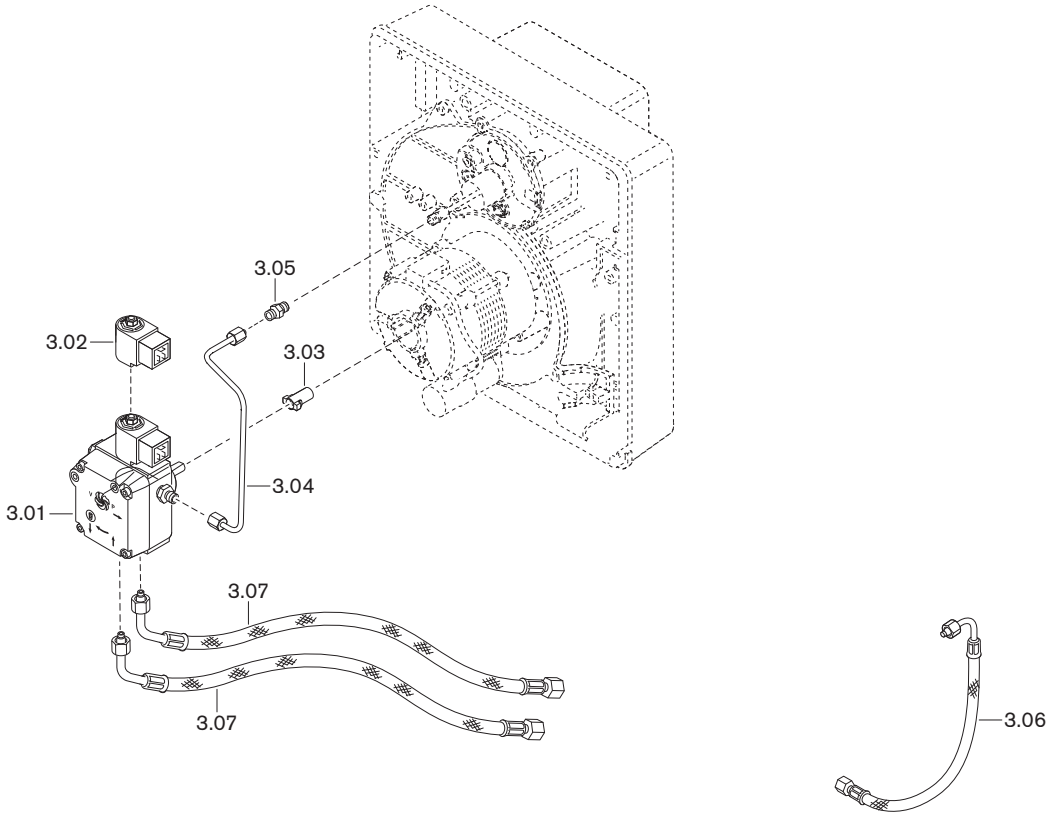

Pos.	Description	Order No.
3.01	Pump ALEV 30 C	601 857
	– Filter set with seal	601 107
3.02	Solenoid coil T80 Suntec 220-240V 50-60Hz	604 495
3.03	Plug coupling	652 135
3.04	Oil line pump-nozzle assembly	241 110 06 018
3.05	Screwed union 24-SX-LL04-ST	452 020
3.06	Pressure hose DN 4, 286 mm diff. resistant (for installation rotated by 180)	491 246
3.07	Oil hose DN 4, 1200 mm	
	– Standard	491 126
	– diffusion resistant / fuel GF-B30*	491 131

* Green Fuels, see supplementary manual (Print No. 835910xx)

13 Spares

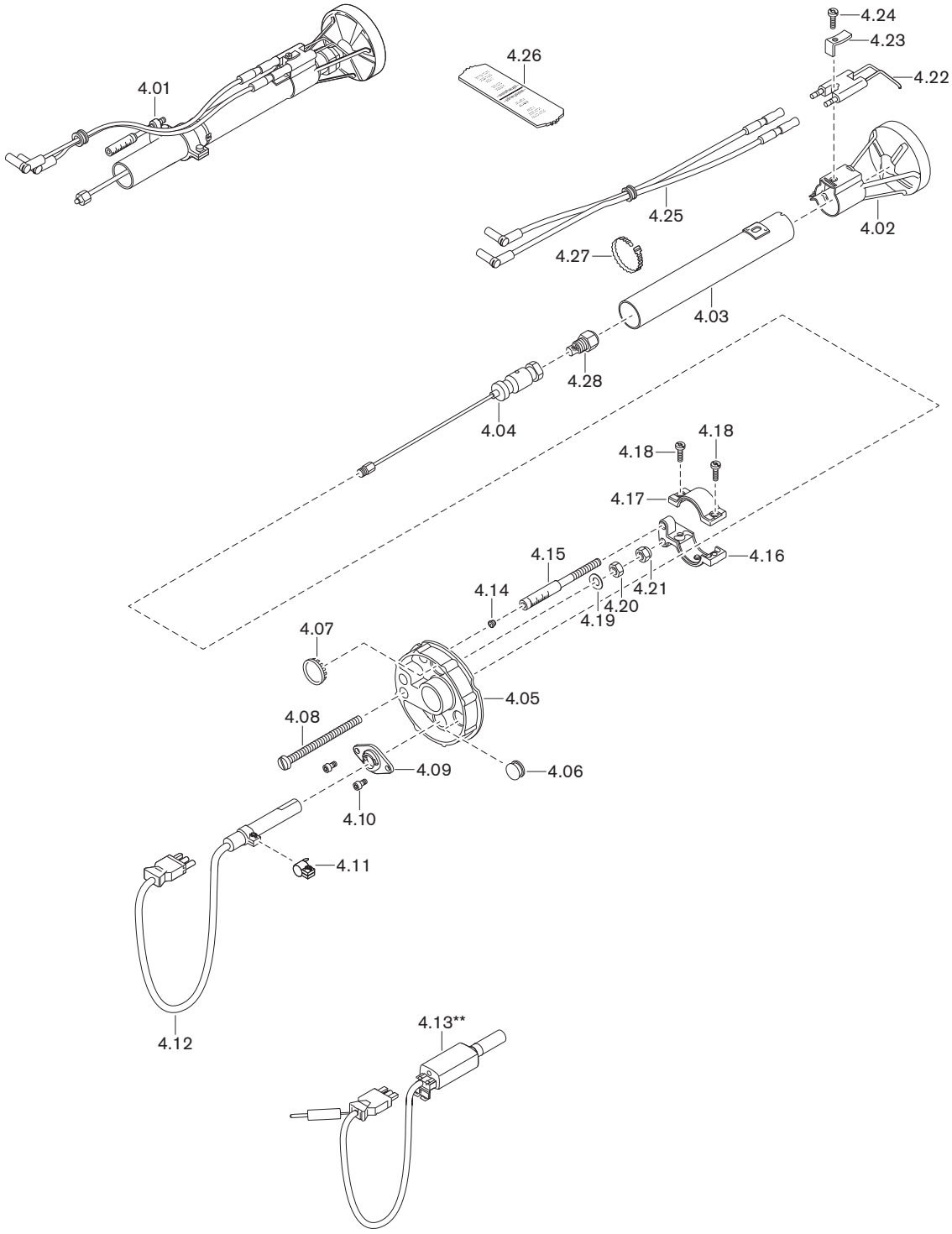
4.01
4.26
4.24
4.23
4.22
4.25
4.02
4.27
4.03
4.28
4.04
4.18
4.18
4.17
4.15
4.16
4.14
4.21
4.20
4.19
4.07
4.05
4.08
4.09
4.06
4.10
4.11
4.12
4.13**

Pos.	Description	Order No.
4.01	Nozzle assembly complete	
	– Standard	241 110 10 020
	– extended by 100 mm*	240 110 10 010
	– extended by 200 mm*	240 110 10 020
	– extended by 300 mm*	240 110 10 030
4.02	Diffuser	241 110 14 042
4.03	Guide tube with stop	
	– Standard	241 110 10 012
	– extended by 100 mm*	240 110 10 022
	– extended by 200 mm*	240 110 10 042
	– extended by 300 mm*	240 110 10 062
4.04	Nozzle head complete	
	– Standard	241 110 10 052
	– extended by 100 mm*	240 110 10 012
	– extended by 200 mm*	240 110 10 032
	– extended by 300 mm*	240 110 10 052
4.05	Nozzle assembly cover complete	
	– for flame senor QRB4	241 110 01 342
	– for flame sensor KLC (fuel GF-P)**	240 110 01 062
4.06	Shut off grommet	756 159
4.07	View port glass	241 400 01 377
4.08	Adjusting screw M6 x 88	241 400 10 097
4.09	Flange	
	– for flame senor QRB4	600 682
	– for flame sensor KLC (fuel GF-P)**	600 637
4.10	Screw 4 x 10 Torx-Plus 20IP Remform	409 383
4.11	Strap AKG43 for QRB4	600 681
4.12	Flame sensor QRB4B	241 050 12 072
4.13	Flame sensor KLC (fuel GF-P)**	240 310 12 182
	– Adapter No. 3	240 050 12 122
	– Ionisation cable No. 13	232 310 12 012
4.14	Plug 5.25	241 110 10 087
4.15	Indicating bolt M6 x 90	241 110 10 097
4.16	Adjusting lever bottom part	241 110 10 067
4.17	Adjusting lever top part	241 110 10 077
4.18	Screw M4 x 12 Torx-Plus 20IP	409 237
4.19	Spring washer A6 DIN 137	431 615
4.20	Hexagonal nut M6 ISO 4032 -8	411 301
4.21	Hexagonal nut M6 DIN 985 -6	411 302
4.22	Ignition electrode	241 050 10 137
4.23	Tension spring	142 013 10 247
4.24	Screw M4 x 14 Torx-Plus 20IP	409 268

* Only in conjunction with combustion head extension.
** Green Fuels, see supplementary manual (Print No. 835910xx)

13 Spares

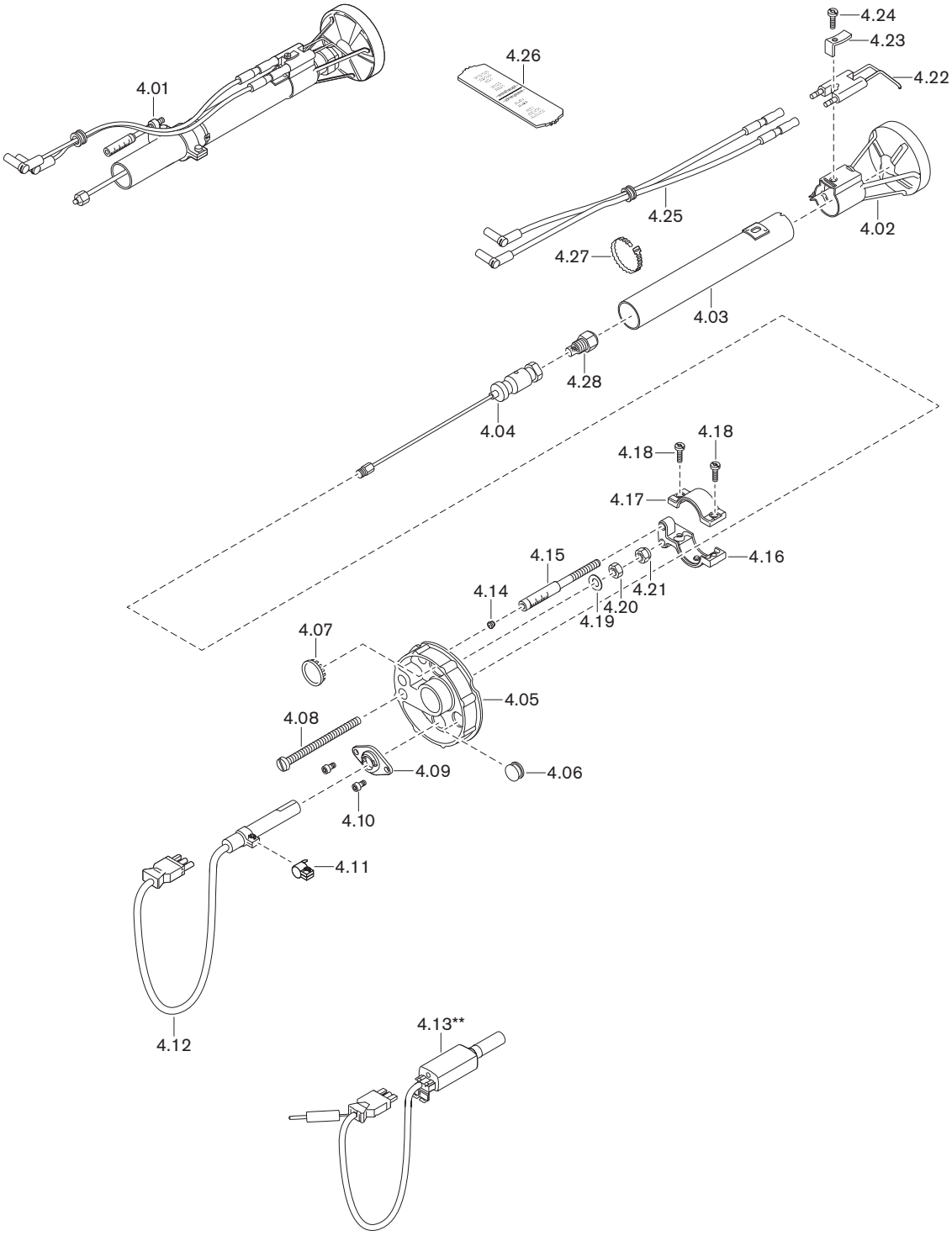
4.01
4.26
4.24
4.23
4.22
4.25
4.02
4.27
4.03
4.28
4.04
4.18
4.18
4.17
4.15
4.16
4.14
4.21
4.20
4.19
4.07
4.05
4.08
4.09
4.06
4.10
4.11
4.12
4.13**

Pos.	Description	Order No.
4.25	Ignition cable	
	– 380 mm (Standard)	241 110 11 032
	– 480mm (for 100 mm extension)*	240 110 11 042
	– 540mm (for 200 mm extension)*	240 110 11 052
	– 640mm (for 300 mm extension)*	240 110 11 062
4.26	Setting gauge	241 050 00 027
4.27	Reopening belt 4.7 x 200	794 089

* Only in conjunction with combustion head extension.
** Green Fuels, see supplementary manual (Print No. 835910xx)

13 Spares

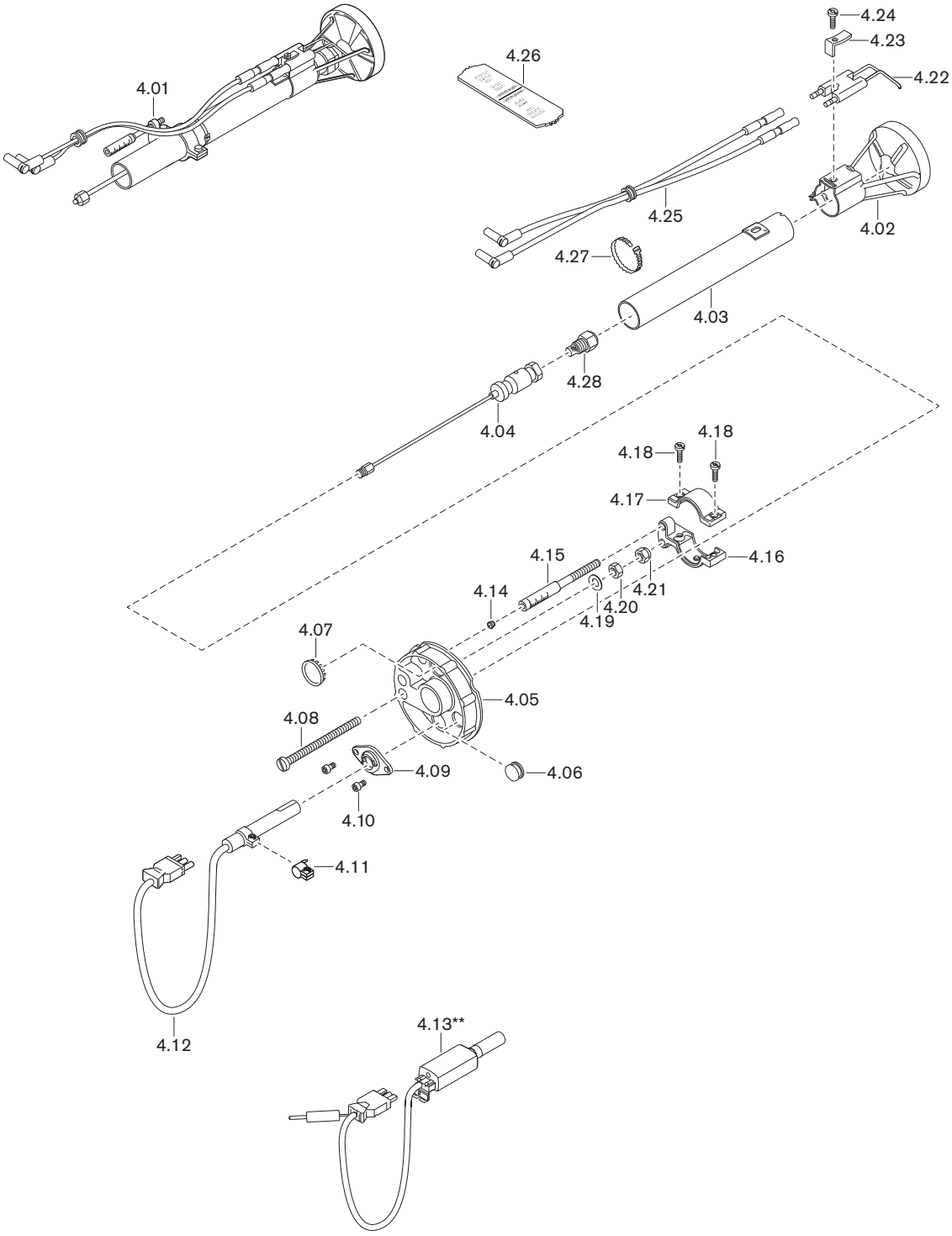
4.01
4.26
4.24
4.23
4.22
4.25
4.02
4.27
4.03
4.28
4.04
4.18
4.18
4.17
4.15
4.16
4.14
4.21
4.20
4.19
4.07
4.05
4.08
4.09
4.06
4.10
4.11
4.12
4.13**

Pos.	Description	Order No.
4.28	Oil nozzle	
	– 0.75 gph 60°S Steinen	612 203
	– 0.85 gph 60°S Steinen	612 206
	– 1.00 gph 60°S Steinen	612 207
	– 1.10 gph 60°S Steinen	612 208
	– 1.25 gph 60°S Steinen	612 210
	– 1.35 gph 60°S Steinen	612 211
	– 1.50 gph 60°S Steinen	612 212
	– 0.75 gph 60°H Steinen	612 513
	– 0.85 gph 60°H Steinen	612 514
	– 1.00 gph 60°H Steinen	612 517
	– 1.10 gph 60°H Steinen	612 518
	– 1.25 gph 60°H Steinen	612 519
	– 1.35 gph 60°H Steinen	612 520
	– 1.50 gph 60°H Steinen	612 521
	– 0.75 gph 45°SF Fluidics	602 060
	– 0.85 gph 45°SF Fluidics	602 061
	– 1.00 gph 45°SF Fluidics	602 062
	– 1.10 gph 45°SF Fluidics	602 063
	– 1.25 gph 45°SF Fluidics	602 064
	– 1.35 gph 45°SF Fluidics	602 065
	– 1.50 gph 45°SF Fluidics	602 066
	– 0.75 gph 45°HF Fluidics	602 683
	– 0.85 gph 45°HF Fluidics	602 684
	– 1.00 gph 45°HF Fluidics	602 710
	– 1.10 gph 45°HF Fluidics	602 711
	– 1.25 gph 45°HF Fluidics	602 713
	– 1.35 gph 45°HF Fluidics	602 714
	– 1.50 gph 45°HF Fluidics	602 715

13 Spares

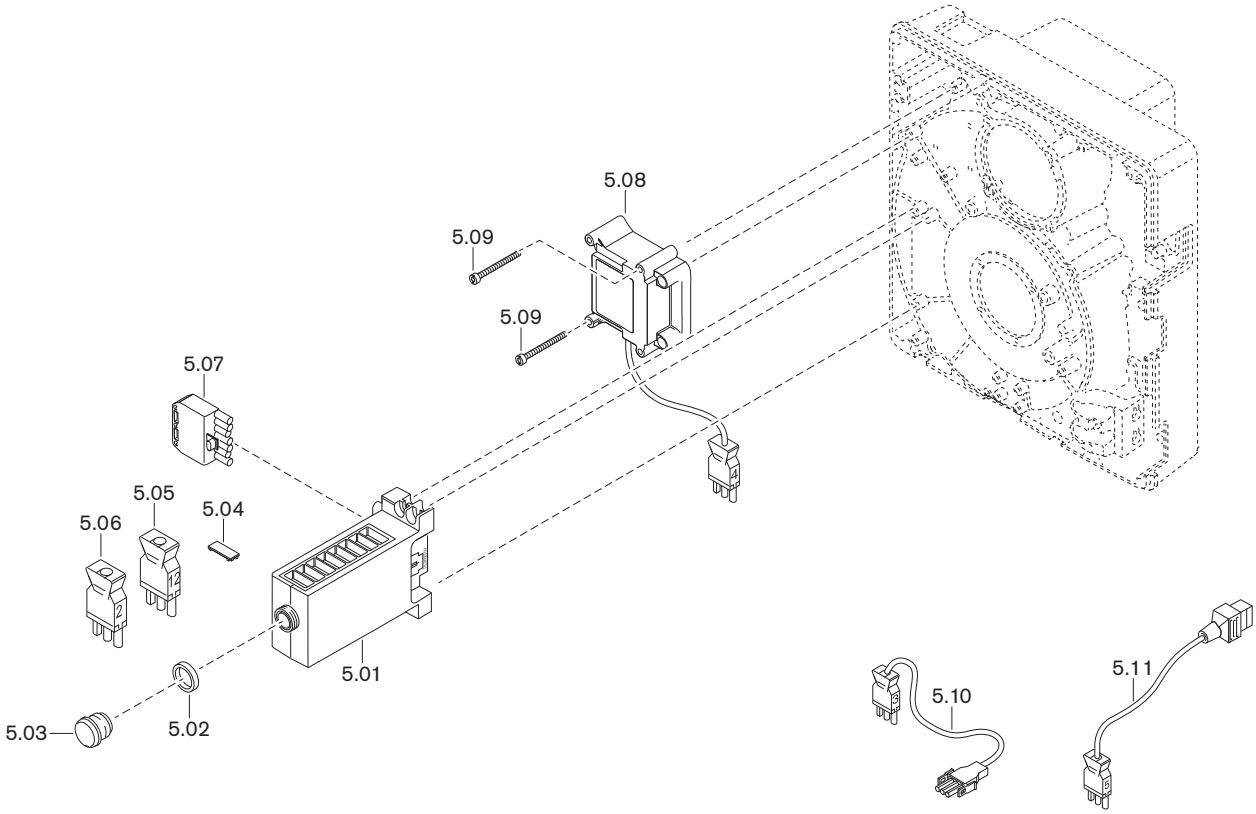

Pos.	Description	Order No.
5.01	Combustion manager W-FM05, 230 V / 50/60 Hz	600 389
	– Micro fuse T6.3H, IEC 127-2/5	483 011 22 457
5.02	Adapter ring 22 x 4 for extension	600 358
5.03	Reset button extension AGK20.19	600 357
5.04	Cover clip AGK63	600 312
5.05	Intermediate plug No. 12	241 050 12 032
5.06	Intermediate plug No. 2	240 200 12 012
5.07	Plug unit ST18/7	716 549
5.08	Ignition unit type W-ZG01V 230 V 100 VA	603 229
5.09	Screw M4 x 42 Combi-Torx-Plus 20IP	409 260
5.10	Plug cable No. 3 motor	241 050 12 062
5.11	Plug cable No. 5 solenoid valve	241 050 12 052

14 Notes

14 Notes

14 Notes

A

Air damper ... 9, 28, 29, 42, 43
Air damper setting ... 28
Air number ... 32
Air regulator ... 42
Ambient conditions ... 14
Ammeter ... 27
Angle drive ... 43
Anti syphon valve ... 58
Aperture ... 18, 20
Approval data ... 14
Atomising pressure ... 19, 30

B

Bar ... 55
Basic setting ... 41
Basic settings ... 28
Booming ... 54
Burner motor ... 11, 46

C

Capacity graph ... 16
CO content ... 32
Combustion air ... 6
Combustion analysis ... 32
Combustion chamber pressure ... 16
Combustion head extension ... 18
Combustion heat rating ... 16, 28
Combustion Manager ... 11, 25
Commissioning ... 26
Consumption ... 14
Conversion table ... 55

D

Default settings ... 28
Design lifespan ... 6, 34
Diffuser ... 9, 28, 29
Diffuser setting ... 28
Dimensions ... 17
Display ... 25
Disposal ... 7
Drilling dimension drawing ... 18
Ducted air intake ... 6, 16

E

Electrical connection ... 24
Electrical data ... 14
Electrodes ... 39
electrostatic discharge ... 7
Emission ... 15
Emission class ... 15
ESD protective measures ... 7
Excess air ... 32
Extraneous light ... 27

F

Fan motor ... 46
Fan pressure ... 27, 29
Fan wheel ... 9, 45
Fault ... 49, 51, 53, 54
Fault codes ... 50, 51, 53
Fault memory ... 50
Filter ... 47, 58
Flame sensor ... 11
Flame signal ... 11, 27
Flame tube ... 18
Flashing codes ... 51, 53
Flow ... 22
Flow pressure ... 22, 27, 58
Flow temperature ... 22
Flowchart ... 12
Flue gas losses ... 32
Flue gas measurement ... 32
Flue gas temperature ... 32
Fuel ... 14
Fuel oil ... 14
Fuel release ... 12
Fusing ... 14, 48

G

Green Fuels ... 14
Guarantee ... 5

H

Heat exchanger ... 18
Hours counter ... 57
Humidity ... 14

I

Idle time ... 33
Ignition ... 12
Ignition electrodes ... 39
Ignition unit ... 11
Illuminated push button ... 25, 49, 50
Indicating bolt ... 29, 41
Initialisation time ... 13
Installation ... 18
Installation elevation ... 14, 16
Installation location ... 6, 18
Intake housing ... 42
Internal unit fuse ... 48

L

Liability ... 5
Lifespan ... 6, 34
Lockout ... 49, 51, 53

M

Mains voltage ... 14
Maintenance position ... 37
mbar ... 55
Measuring device ... 27
Mechanical noises ... 54
Mixing head ... 9, 28, 40, 41
Mixing pressure ... 27, 29
Monitoring current ... 27
Motor ... 11, 46

15 Key word index

N

Name plate ... 8
Noise emission values ... 15
Nozzle ... 19, 38
Nozzle assembly ... 41
Nozzle distance ... 41
Nozzle selection ... 19
Nozzle selection table ... 19

O

Oil feeder pump ... 58
Oil filter ... 47, 58
Oil hose ... 22
Oil nozzle ... 19, 38
Oil pressure measuring device ... 27
Oil pump ... 10, 22, 27, 44, 59
Oil pump filter ... 47
Oil supply ... 22, 58
Oil temperature ... 58
Operating hours counter ... 57
Operating problems ... 54
Operational failure ... 33

P

Pa ... 55
Pascal ... 55
Personal protective equipment ... 6
Plug assignment ... 56
Post-ignition time ... 13
Post-purge ... 12
Post-purge time ... 13
PPE ... 6
Pre-filter ... 58
Pre-purge ... 12
Pre-purge time ... 13
Pressure gauges ... 27
Pressure measuring device ... 27
pressure regulating screw ... 30
Problem solving ... 54
Program sequence ... 12
Protective equipment ... 6
Pulsating ... 54
Pump ... 10, 22, 27, 44, 59
Pump filter ... 47
Pump pressure ... 19, 27, 30

R

Rating ... 16
Recommended nozzles ... 19
Refractory ... 18
Remote reset ... 24
Reset ... 50
Reset button ... 25
Return ... 22
Ring main operation ... 59

S

Safety measures ... 6
Safety symbols ... 6
Safety time ... 12, 13
Sequence diagram ... 10
Serial number ... 8
Service contract ... 34
Service interval ... 34
Service plan ... 36
Service position ... 37
Servicing ... 34
Setting dimension ... 41
Setting gauge ... 41
Setting screw ... 41
Shutdown ... 33
Signal lamp ... 25
Single pipe oil supply ... 59
Solenoid valve ... 10
Soot deposit ... 54
Sound levels ... 15
Sound power level ... 15
Sound pressure level ... 15
Spares ... 61
Stability problems ... 54
Standards ... 14
Storage ... 14
Suction resistance ... 22, 58
Supply pressure ... 22, 58
Supply temperature ... 22
Symbol ... 6

T

Temperature ... 14
Transport ... 14, 17
Two pipe system ... 59
Type ... 8
Type key ... 8

U

Unit of pressure ... 55

V

Vacuum ... 58
Vacuum gauge ... 27
Voltage supply ... 14

W

Warning label ... 6
Weight ... 17
Wiring diagram ... 56

–weishaupt–

Max Weishaupt SE · 88475 Schwendi

Weishaupt close by? Addresses, telephone numbers etc. can be found at www.weishaupt.de

We reserve the right to make changes. All rights reserved.

Das ist Zuverlässigkeit. C'est la fiabilité. That's reliability. Questa è affidabilità. 信頼性とは、ころいろものです。Това е надеждност. Ez a megbízhatóság. Đó là sự đáng tin cậy. تسا نانيوطلا تيلباقة نيا To je zanesljivost. Güvence budur. Αυτό σημαίνει αξιοπιστία. 그것은 바로 신뢰성입니다. To je spoľahlivosť. Dat is betrouwbaarheid. Tämä on luotettavuutta. هذه هي الوثوقية See on usaldusväärsus. Pouzdana tvrtka. To jest niezawodność. นั้นคือความเชื่อถือใคั Це надійність. Isto é fiabilidade. To je spolehlivost. यही वशि्वसनीयता है. Det är pålitlighet. זאת אמינות. Esto es fiabilidad. Это надежность. Itulah kepercayaan. 值得信赖。 Is é sin iontaofacht. Iyan ang maaasahan. Aceasta este fiabilitatea. وہ ہے وشوسنیییتا۔ Tai - patikimumas. Det er pålitelighet. Tā ir uzticamība. Sa se fyab. To je pouzdanost. La fiabilité avant tout. Det er pålidelighed.

83292502 ▪ 1/2026-07 ▪ La