–weishaupt–

manual

Installation and operating instruction

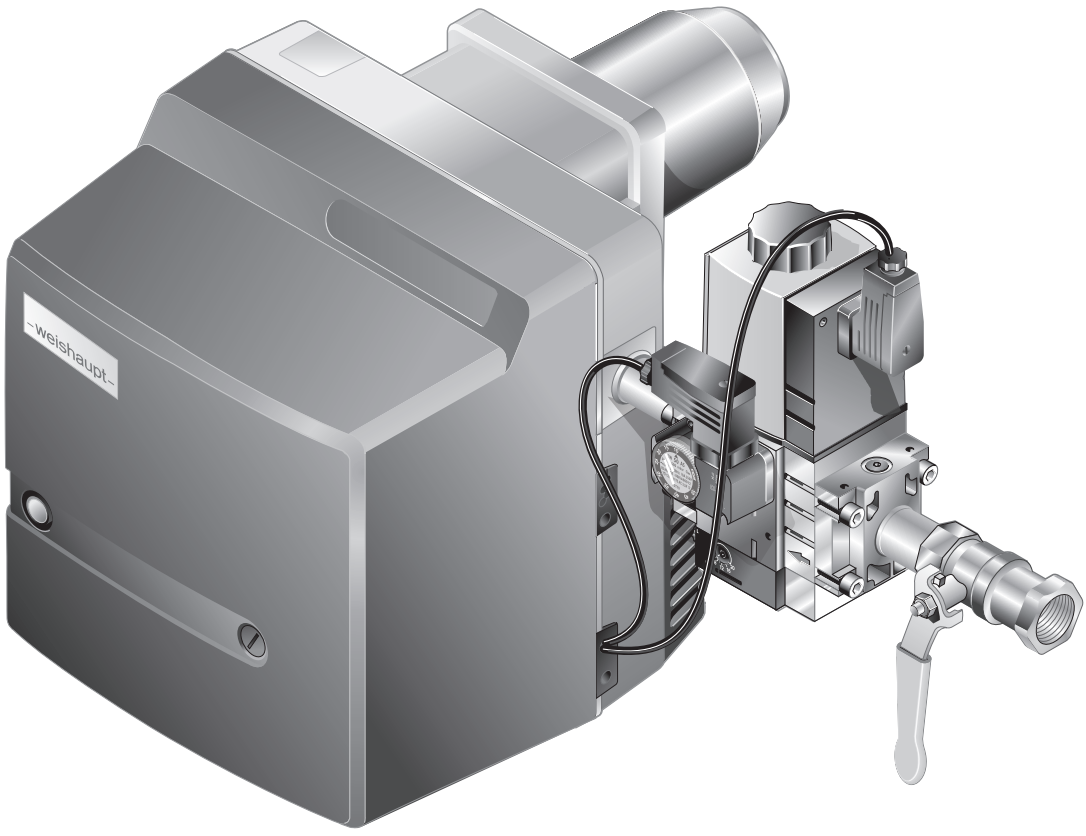

Gas burner WG10…/1-D Z-LN

83055302 ▪ 1/2026-07

1 User instructions 5
1.1 Target group 5
1.2 Symbols in the manual 5
1.3 Guarantee and Liability 6

2 Safety 7
2.1 Designated application 7
2.2 Safety symbols on the device 7
2.3 When gas can be smelled 7
2.4 Safety measures 8
2.4.1 Personal protective equipment (PPE) 8
2.4.2 Normal operation 8
2.4.3 Electrical work 8
2.4.4 Gas supply 9
2.5 Alterations to the construction of the equipment 9
2.6 Noise emission 9
2.7 Disposal 9

3 Product description 10
3.1 Type key 10
3.2 Type and serial number 10
3.3 Function 11
3.3.1 Air supply 11
3.3.2 Gas supply 12
3.3.3 Electrical components 13
3.3.4 Program sequence 14
3.4 Technical data 16
3.4.1 Approval data 16
3.4.2 Electrical data 16
3.4.3 Ambient conditions 16
3.4.4 Permissible fuels 16
3.4.5 Emissions 17
3.4.6 Rating 18
3.4.7 Dimensions 19
3.4.8 Weight 20

4 Installation 21
4.1 Installation requirements 21
4.2 Burner installation 22
4.2.1 Rotate burner by 180° (optional) 23

5 Installation 25
5.1 Gas supply 25
5.1.1 Installing the gas valve train 26
5.1.2 Carry out soundness test of gas supply line and vent 28
5.2 Electrical connection 29

6 Operation 30
6.1 Operating panel 30
6.2 Display 30

7 Commissioning ... 31
7.1 Prerequisite ... 31
7.1.1 Connect measuring devices ... 32
7.1.2 Check gas connection pressure ... 33
7.1.3 Check soundness of gas valve train ... 34
7.1.4 Purging the gas valve train ... 37
7.1.5 Preset pressure regulator ... 38
7.1.6 Setting values ... 40
7.1.7 Preset gas and air pressure switch ... 41
7.2 Adjusting the burner ... 42
7.3 Set pressure switches ... 46
7.3.1 Set gas pressure switch ... 46
7.3.2 Set air pressure switch ... 47
7.4 Concluding work ... 48
7.5 Check combustion ... 49
7.6 Calculate gas throughput ... 50

8 Shutdown ... 51

9 Servicing ... 52
9.1 Notes on servicing ... 52
9.2 Service plan ... 54
9.3 Removing and refitting mixing head ... 55
9.4 Set mixing head ... 56
9.5 Set ionisation and ignition electrodes ... 57
9.6 Service position ... 58
9.7 Removing and refitting fan wheel ... 59
9.8 Remove burner motor ... 60
9.9 Removing and refitting air damper actuator ... 61
9.10 Removing and refitting angle drive ... 62
9.11 Removing and refitting gas butterfly valve ... 63
9.12 Removing and refitting air regulator ... 64
9.13 Replacing coil on multifunction assembly ... 65
9.14 Replace breather plug of multifunction assembly ... 65
9.15 Removing and refitting filter insert of multifunction assembly ... 66
9.16 Replacing the fuse ... 67

10 Troubleshooting ... 68
10.1 Procedures for fault conditions ... 68
10.1.1 Illuminated push button off ... 68
10.1.2 Illuminated push button red ... 69
10.1.3 Illuminated push button flashes ... 72
10.2 Operating problems ... 73

11 Technical documentation ... 74
11.1 Wiring diagram ... 74
11.2 Conversion table unit of pressure ... 76
11.3 Appliance categories ... 76

12 Project planning 81
12.1 Continuous running fan or post-purge 81

13 Spares 82

14 Notes 92

15 Key word index 93

1 User instructions

This manual forms part of the equipment and must be kept on site.

Translation of original operating instructions



Carefully read the manual prior to working on the unit.

1.1 Target group

The manual is intended for the operator and qualified personnel. It should be observed by all personnel working with the unit.

Work on the unit must only be carried out by personnel who have had the relevant training and instruction.

Persons with limited physical, sensory or mental capabilities may only work on the unit if they are supervised or have been trained by an authorised person.

Children must not play with the unit.

1.2 Symbols in the manual

 **DANGER**	Danger with high risk. Non observance can lead to serious injury or death.
 **WARNING**	Danger with medium risk. Non observance can lead to serious injury or death.
 **CAUTION**	Danger with low risk. Non observance can cause injury to personnel.
 **NOTICE**	Non observance can cause damage to the equipment and environmental damage.
	Important information
▶	Requires direct action
✓	Result after an action
▪	Itemisation
…	Range of values or ellipsis
02	Replacement character for digits, e. g. language key for Print No.
`Display text`	Font for text that appears in the display

1.3 Guarantee and Liability

Guarantee and liability claims for personal and equipment damage are excluded, if they can be attributed to one or more of the following causes:

- non approved application
- non-observance of the manual
- operation with faulty safety equipment
- continual operation despite a fault
- improper installation, commissioning, operation and service
- repairs, which have been carried out incorrectly
- the use of non-original Weishaupt parts
- force majeure
- unauthorised modifications made to the unit
- the installation of additional components, which have not been tested with the unit
- the installation of combustion chamber inserts, which impede full flame formation
- unsuitable fuels
- defects in the inlet lines

2 Safety

2.1 Designated application

The burner is suitable for operation on heat exchangers to EN 303 and combustion chambers to EN 676.

If the burner is not used on combustion chambers to EN 303 and EN 676, a safety assessment of combustion and flame stability during individual process conditions, as well as the shutdown limits of the combustion plant has to be carried out and documented.

The Technical data must be adhered to [ch. 3.4].

The combustion air must be free from aggressive compounds (e. g. Halogens).
If the combustion air is contaminated, increased cleaning and servicing will be required. In this case ducted air intake is recommended.

The burner should preferably be operated indoors.
If the burner is not operated indoors, weather protection is required to protect from rain and direct sunlight. The ambient conditions must be adhered to [ch. 3.4.3].

Improper use could:
- endanger the health and safety of the user or third parties
- cause damage to the unit or other material assets

2.2 Safety symbols on the device

Symbol	Description	Position
	Warning of electrical voltage	Burner housing
	Dangerous electric voltage	Ignition unit

2.3 When gas can be smelled

Avoid open flames and spark generation, for example:
- do not operate light switches
- do not operate electronic equipment
- do not use mobile telephones

- ► Open doors and windows.
- ► Close gas isolation valve.
- ► Warn the inhabitants, do not ring door bells.
- ► Leave the building.
- ► Inform the heating contractor or gas supplier from outside of the building.

2.4 Safety measures

Safety relevant fault conditions must be eliminated immediately.

Components, which show increased wear and tear or whose design lifespan is or will be exceeded prior to the next service should be replaced as a precaution.

The design lifespan of the components is listed in the service plan [ch. 9.2].

2.4.1 Personal protective equipment (PPE)

Use the necessary personal protective equipment for all work.

Personal protective equipment protects the user when working on the device.

Safety shoes must be worn during all work carried out on the device.

Further necessary PPE is shown in the respective section by a mandatory symbol.

Symbol	Description	Information
	Use hand protection	▶ Wear suitable protective gloves.

2.4.2 Normal operation

- All labels on the unit must be kept in a legible condition and replace if necessary.
- Stipulated service work should be carried out at regular intervals.
- Only operate the unit with its cover closed.
- Ensure combustion air supply is unimpeded.

2.4.3 Electrical work

When working on live components please ensure you:
- observe the accident prevention instructions (e. g. DGUV Regulation 3) and adhere to local directives
- use tools in accordance with EN IEC 60900

The device contains components, which could be damaged by electrostatic discharge (ESD).
When working on circuit boards and contacts:
- do not touch circuit boards or contacts
- if necessary, take ESD protective measures

2.4.4 Gas supply

- Only the gas supply company or an approved contract installation company may carry out installation, alteration and maintenance work on gas appliances in buildings and properties.
- Pipework must be subject to a combined load and valve proving test and/or usability testing relative to the pressure range intended, e. g. DVGW-TRGI, worksheet G 600.
- Inform the gas supply company about the type and size of plant prior to installation.
- Local regulations and guidelines must be observed during installation, e. g. DVGW-TRGI, worksheet G 600; TRF Band 1 and Band 2.
- The gas supply pipe work should be suitable for the type and quality of gas and should be designed in such a way that it is not possible for liquids to form, e. g. condensate. Observe vaporisation pressure and vaporisation temperature of liquid petroleum gas.
- Use only tested and approved sealing materials, whilst observing all process information.
- Re-commission the appliance when changing to a different type of gas. Changing from LPG to Natural Gas and visa versa requires a conversion.
- Carry out soundness test after each service and fault rectification.

2.5 Alterations to the construction of the equipment

All conversions require written approval from Max Weishaupt SE.

- No additional components may be fitted, which have not been tested for use with the equipment.
- Do not use combustion chamber inserts, which hinder flame burnout.
- Use only original Weishaupt replacement parts.

2.6 Noise emission

The noise emissions are determined by the acoustic behaviour of all components fitted to the combustion system.

Prolonged exposure to high noise levels can lead to loss of hearing. Provide operating personnel with protective equipment.

Noise emissions can further be reduced with a sound attenuator.

2.7 Disposal

Dispose of all materials and components in a safe and environmentally friendly way at an authorised location. Observe local regulations.

3 Product description

3.1 Type key

Example: WG10N/1-D Z-LN

Type	
W	Series: Compact burner
G	Fuel: Gas
10	Size
N	N: Natural Gas F: Liquid Petroleum Gas
1	Ratings size
D	Construction stage

Version	
Z	Type of control: two stage
LN	Mixing head: LowNO_x

3.2 Type and serial number

The type and serial number on the type plate clearly identify the product. They are required by Weishaupt's customer service department.

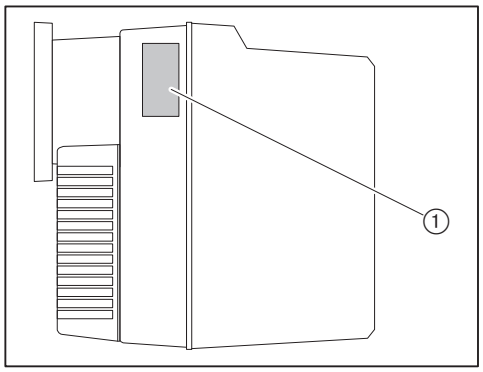

① Name plate

Mod.: _____	**Ser. Nr.:** _____

3.3 Function

3.3.1 Air supply

Air damper

The air damper regulates the air quantity required for combustion. The combustion manager drives the air damper via actuator.

At burner shutdown the actuator automatically closes the air damper. This reduces heat loss in the heat exchanger.

Fan wheel

The fan wheel supplies the air from the air intake housing to the combustion head.

Diffuser

The air gap between flame tube and diffuser is adjusted by positioning the diffuser. This adjusts the mixing pressure and the air quantity required for combustion.

Air pressure switch

The air pressure switch monitors the fan pressure. If the fan pressure is insufficient, the combustion manager initiates a lockout.

3.3.2 Gas supply

Gas isolation valve ①

The gas isolation valve opens and shuts off the gas supply.

Multifunction assembly ⑧

The multifunction assembly contains:

Gas filter ②	The gas filter protects the subsequent valve train components from foreign particles.
Double gas valve ④	The double gas valve opens and shuts off the gas supply.
Pressure regulator ③	The pressure regulator reduces the connection pressure and ensures a constant set pressure.

Gas butterfly valve ⑤

The gas butterfly valve regulates the gas quantity depending on the rating required. The air/gas ratio is adapted via mechanical compound to the air damper setting.

Low gas pressure switch/valve proving gas pressure switch ⑦

The gas pressure switch monitors the gas connection pressure. If the preset pressure is not achieved, the combustion manager initiates a safety shutdown.

The gas pressure switch also monitors if the gas valves are tight. It signals the combustion manager if the pressure increases or decreases to an impermissible level during valve proving.

Valve proving is carried out automatically by the combustion manager:
- after every controlled shutdown
- prior to burner start following lockout or power outage

1. Test phase (function sequence for valve proving valve 1):
- valve 1 closes
- valve 2 closes after a delay
- the gas escapes and the pressure between valve 1 and valve 2 reduces
- both valves remain closed for 8 seconds

If the pressure increases above the set value during these 8 seconds, valve 1 is leaking. The combustion manager initiates a controlled shutdown.

2. Test phase (function sequence for valve proving valve 2):
- valve 1 opens, valve 2 remains closed
- pressure between valve 1 and valve 2 increases
- valve 1 closes again
- both valves remain closed for 8 seconds

If the pressure decreases below the set value during these 8 seconds, valve 2 is leaking. The combustion manager initiates a controlled shutdown.

High gas pressure switch ⑥ (optional)

The high gas pressure switch monitors the set pressure. If the set pressure exceeds the set value, the combustion manager initiates a controlled shutdown.

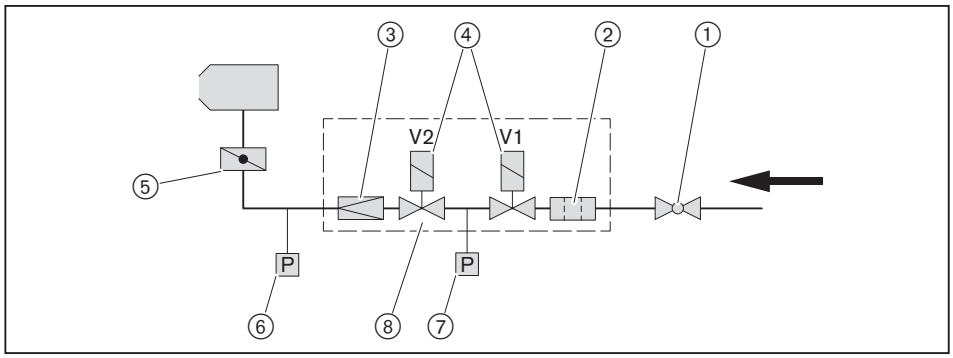

3.3.3 Electrical components

Combustion Manager

The combustion manager W-FM is the control unit of the burner.

It controls the sequence of operation and monitors the flame.

Burner motor

The burner motor drives the fan wheel.

Ignition unit

The electronic ignition unit creates a spark at the electrode, which ignites the fuel/air mixture.

Ionisation electrode

The combustion manager monitors the flame signal via the ionisation electrode.

If the flame signal becomes too weak, the combustion manager carries out a controlled shutdown.

3.3.4 Program sequence

Pre-purge

At heat demand, the actuator drives to full load position after the initialisation time (T_I) has elapsed.
The burner motor starts and the air pressure switch reacts.
The combustion chamber is pre-purged.

Ignition

Following the pre-purge phase (T_V) the actuator drives to ignition position.
Ignition starts.

Fuel release

Following pre-ignition time (T_{VZ}) valve 1 opens and the gas pressure switch reacts.
Valve 2 opens and releases the fuel.

Safety time

With fuel release, safety time (T_S) and post-ignition time (T_{NZ}) starts.

The flame signal must be present within the safety time (T_S).

Operation

The ionisation electrode monitors the flame.
The air damper actuator opens and closes depending on the regulator demand for full load.
The residence time partial load (T_{VK}) prevents cycling between partial and full load.

Post-purge

If there is no longer a heat demand, the solenoid valves close and stop the fuel supply.
Post-purge time (T_N) and valve proving begins [ch. 3.3.2].

Following the post-purge time (T_N) the burner motor switches off.

The air damper actuator drives to the Closed position.

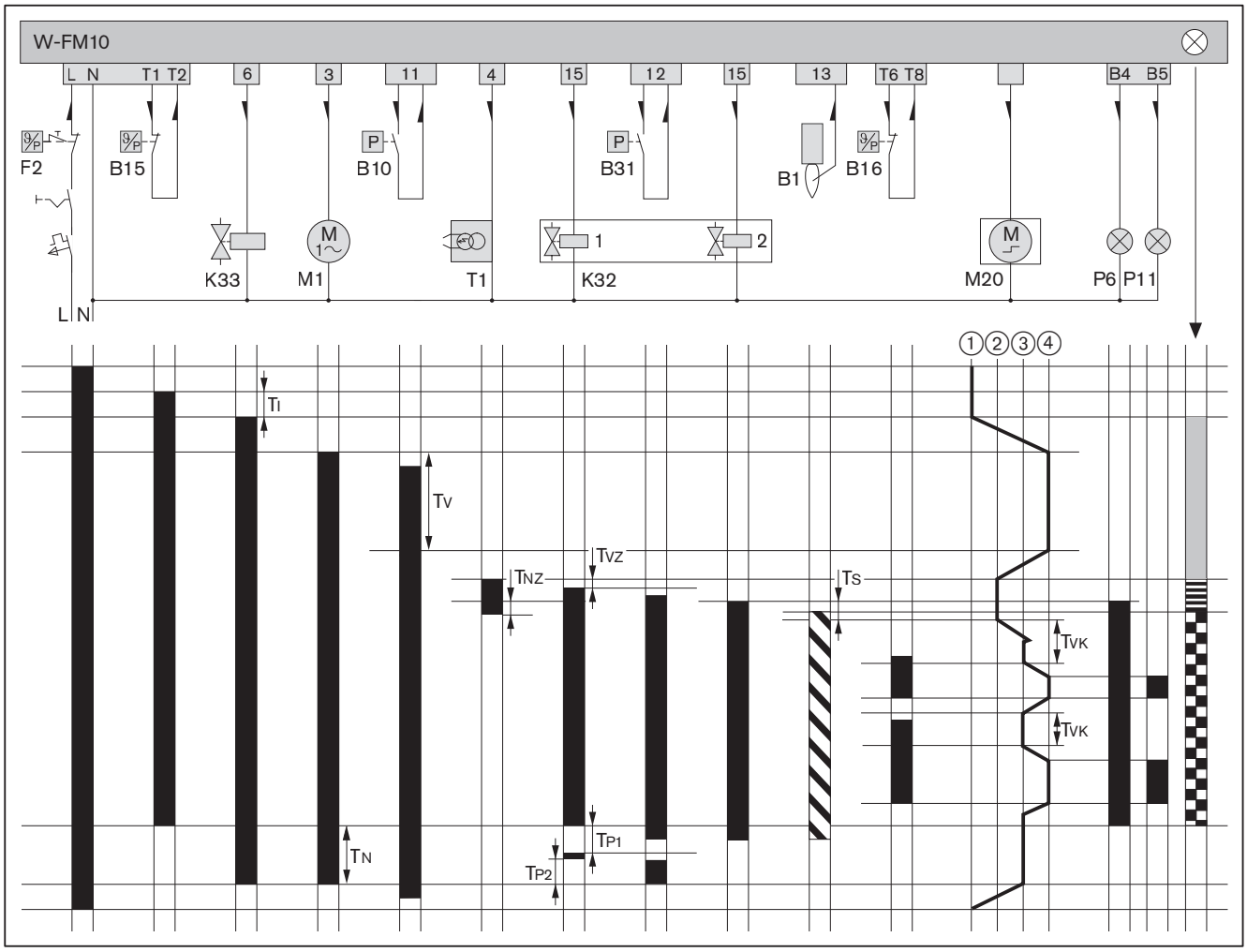

B1	Ionisation electrode	T_I	Initialisation time (Test): 3 s
B10	Air pressure switch	T_N	Post-purge time: 4.5 s
B15	Temperature or pressure regulator	T_{NZ}	Post-ignition time: 2.5 s
B16	Temperature or pressure regulator full load	T_{P1}	1st test phase: 8 s (valve proving valve 1)
B31	Low gas pressure switch	T_{P2}	2st test phase: 8 s (valve proving valve 2)
F2	Temperature or pressure limiter	T_S	Safety time: 3 s
K32	double gas valve	T_V	Pre-purge time: 21.5 s
K33	External valve LPG	T_{VK}	Residence time partial load: 5 s
M1	Burner motor	T_{VZ}	Pre-ignition time: 2 s
M20	Air damper actuator		Voltage is applied
P6	Control lamp operation (optional)		Flame signal present
P11	Control lamp full load (optional)		Current path
T1	Ignition unit		START (orange)
①	CLOSED position (ST0)		Ignition phase (flashing orange)
②	Ignition load (ZL Gas)		Burner operation (green)
③	Partial load (ST1)		
④	Full load (ST2)		

3.4 Technical data

3.4.1 Approval data

PIN (EU) 2016/426	CE-0085BM0481
Basic standards	EN 676:2020 + AC:2022 Additional standards, see EU Declaration of Conformity.

3.4.2 Electrical data

Mains voltage / Mains frequency	230 V/50 Hz
Consumption at start	max 253 W
Consumption during operation	max 153 W
Power consumption	max 1.2 A
Internal unit fuse	T6.3H, IEC 127-2/5
External fuse	B6 A

3.4.3 Ambient conditions

Temperature in operation	–15 … +40 °C
Temperature during transport/storage	–20 … +70 °C
relative humidity	max 80 %, no dew point
Installation elevation	max 2000 m(1

(1 Consultation with Weishaupt is required for higher installation elevation.

3.4.4 Permissible fuels

- Natural Gas E/LL
- Liquid Petroleum Gas B/P
- Natural gas with hydrogen content > 10 %, see supplementary manual (Print No. 835927xx)

3.4.5 Emissions

Flue gas

- Emission Class 5 for Natural gas to EN 676.
- Emission Class 4 for Liquid Petroleum Gas to EN 676

The NO_x values are influenced by:
- combustion chamber dimensions
- flue gas system
- Fuel
- combustion air (temperature and humidity)
- medium temperature

Combustion chamber dimensions, see Weishaupt Partner Portal (Documents and Applications → Online Applications → NO_x calculation for burner).

Sound levels

Dyad noise emission values	
Measured sound power level L_{WA} (re 1 pW)	69 dB(A)(1
Uncertainty value K_{WA}	4 dB(A)
Measured sound pressure level L_{pA} (re 20 µPa)	65 dB(A)(2
Uncertainty value K_{pA}	4 dB(A)

(1 Determined to ISO 9614-2.
(2 Determined at 1 metre distance from the front of the burner.
The measured noise levels plus uncertainty values form the upper limit value, which could occur when measuring.

3.4.6 Rating

Combustion heat rating

Natural Gas	25 … 110 kW
LPG	25 … 110 kW

Capacity graph

Capacity graph to EN 676.

The capacity data given relates to an installation elevation of 0 m above sea level. For installation elevations above 0 m a capacity reduction of approx. 1 % per 100 m applies.

A limited capacity graph is valid for ducted air intake.

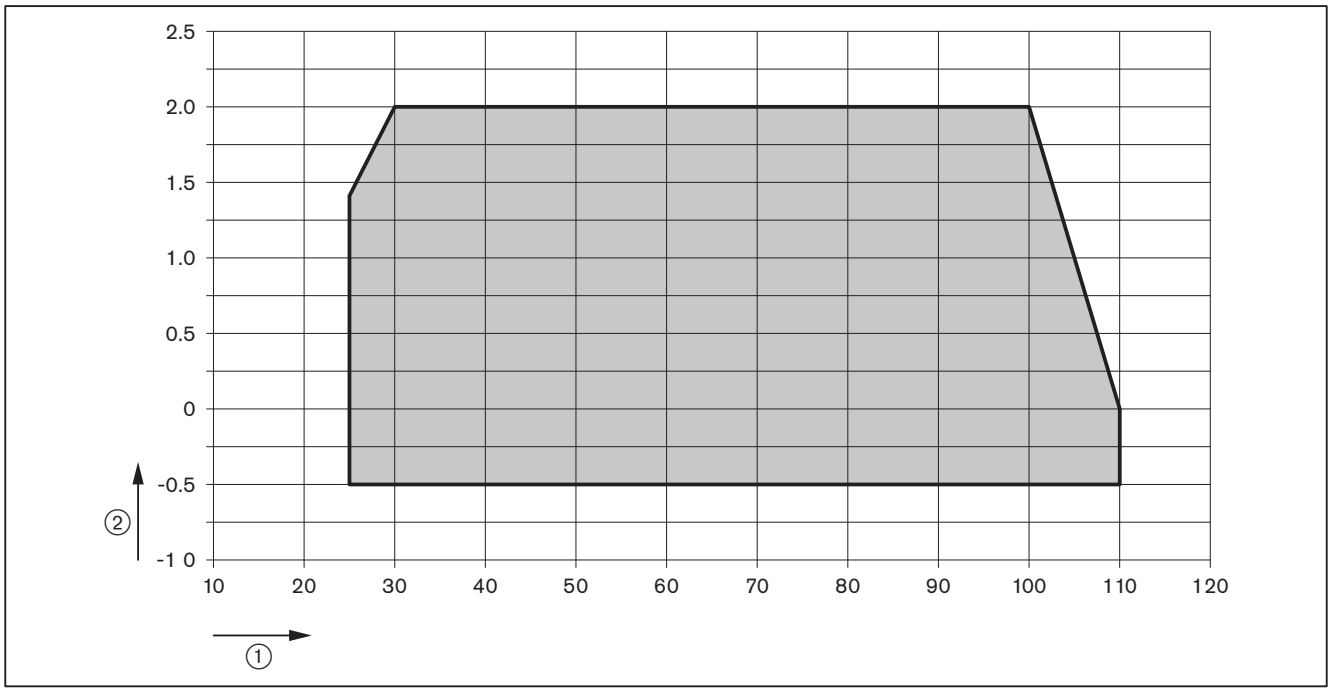

① Combustion heat rating [kW]
② Combustion chamber pressure [mbar]

3.4.7 Dimensions

Burner

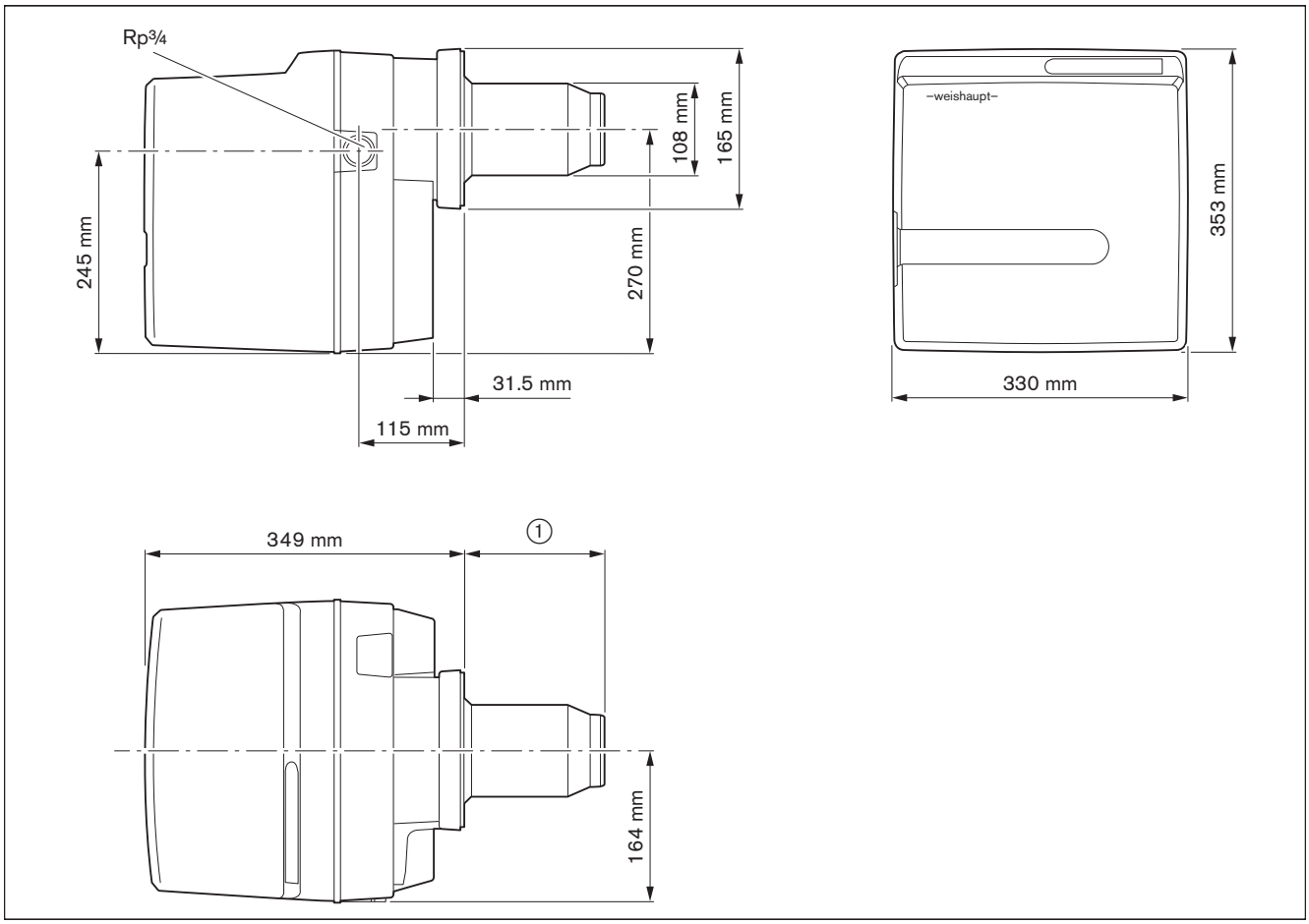

① 140 mm without combustion head extension
240 mm with combustion head extension (100 mm)
340 mm with combustion head extension (200 mm)
440 mm with combustion head extension (300 mm)

Valve train

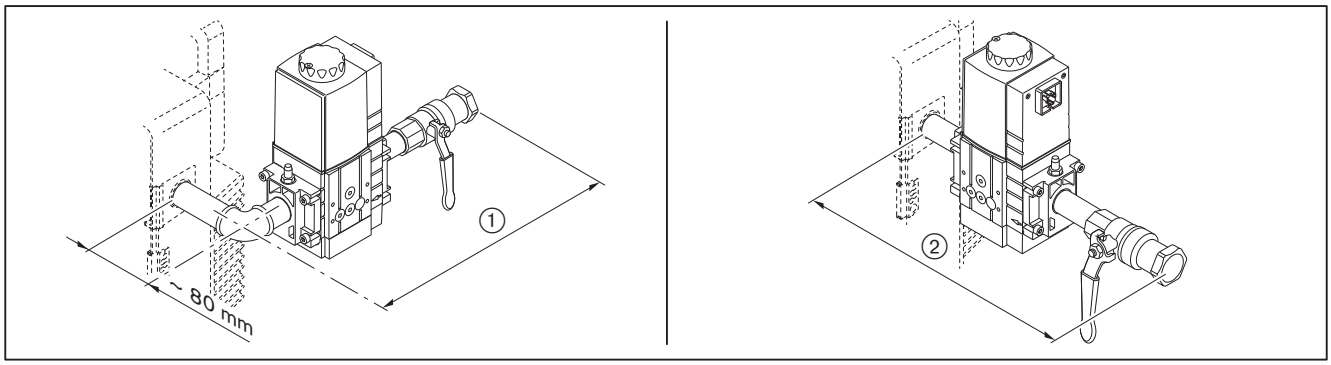

	Ball valve	With thermal shut off device	Without thermal shut off device
①	Rp¾	approx. 310 mm	approx. 295 mm
	Rp1	approx. 320 mm	approx. 300 mm
②	Rp¾	approx. 310 mm	approx. 295 mm
	Rp1	approx. 320 mm	approx. 300 mm

3.4.8 Weight

approx. 14 kg

4 Installation

4.1 Installation requirements

Burner type and capacity graph

Burner and heat exchanger must be matched.

► Check burner type and burner capacity.

Installation location

► Prior to installation ensure that:
- sufficient space is available for normal and service position [ch. 3.4.7]
- sufficient combustion air is available and, if necessary, a ducted air intake is installed

Prepare heat exchanger

The refractory ③ must not protrude beyond the front edge of the combustion head. The refractory can take a conical shape (min 60°).

Refractory may not be required on boilers with water-cooled front, unless the manufacturer gives other instructions.

Following installation, the aperture ④ between flame tube and refractory should be filled with flame-proof, resilient insulating material. Do not make solid.

Heat exchangers with deep refractories or thick doors, or heat exchangers with reverse flame combustion chambers may require a combustion head extension. Head extensions of 100, 200 and 300 mm are available. Dimension ② then changes according to the head extension used.

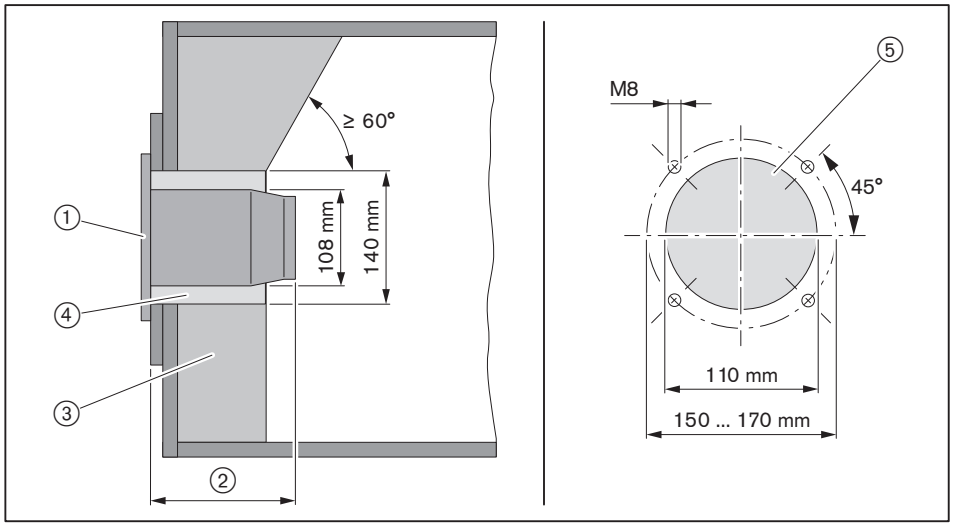

① Flange gasket
② 140 mm
③ Refractory
④ Aperture
⑤ Boiler plate recess

4.2 Burner installation

Only valid in Switzerland
When installing and operating the regulations of SVGW, of the VKF, local and Cantonal regulations and the EKAS-guideline No. 6517: LPG guideline must be observed.

The burner in its standard version is designed for valve train connection from the right. For gas valve train connection from the left the burner has to be installed rotated by 180 . This requires conversion measures [ch. 5.1.1].

- ► Remove mixing head [ch. 9.3].
- ► Remove burner flange ① from burner housing.
- ► Fit flange gasket ② and burner flange ① to the heat exchanger using screws ③.
- ► The aperture between flame tube and refractory should be filled with flame-proof, resilient insulating material (do not make solid).

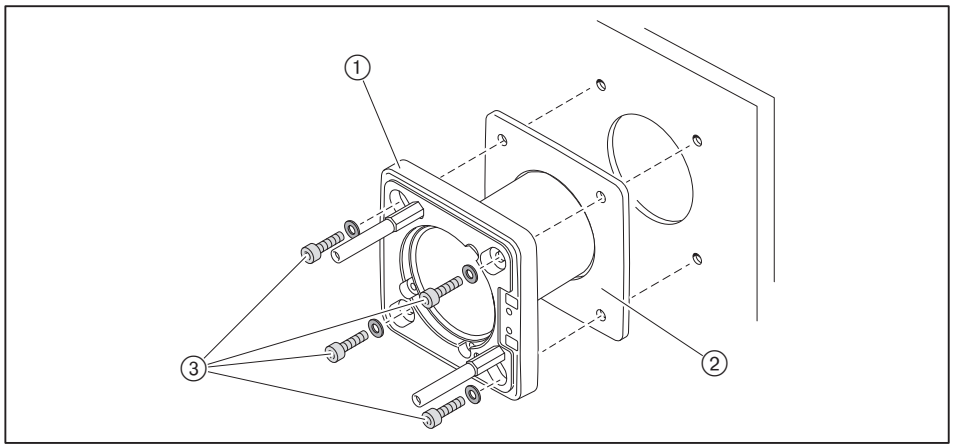

- ► Mount burner with screws ① to burner flange.

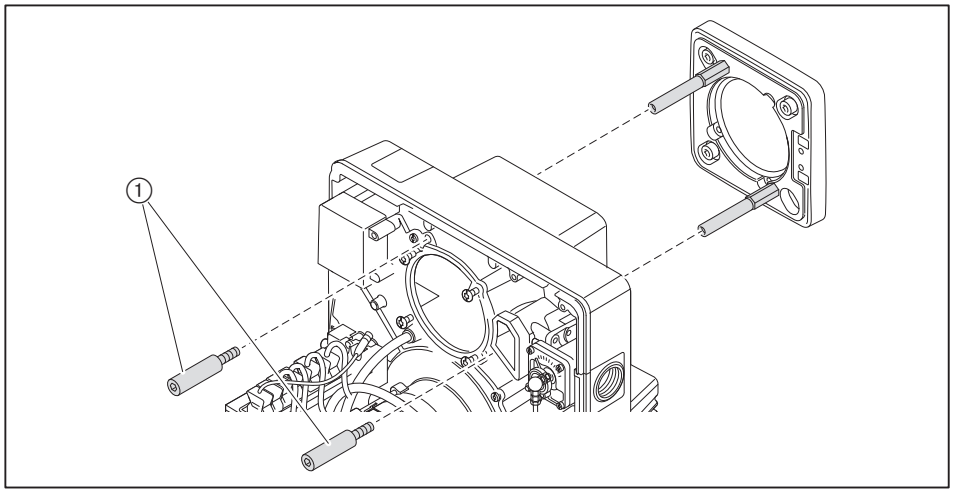

- ► Check setting of electrodes [ch. 9.5].
- ► Fit mixing head [ch. 9.3].

4.2.1 Rotate burner by 180° (optional)

The following are required for the conversion:
- actuator adapter with fixing screws
- lever with a longer shaft

- ► Remove actuator ①.
- ► Disconnect linkage ③.
- ► Remove complete lever ②.
- ► Fit lever with longer shaft ④ to angle drive.
- ► Fit adapter ⑤.
- ► Turn indicator ⑥ to CLOSED position and hold.
- ► Mount actuator rotated by 180° whilst sliding the shaft ④ into the star shaped groove ⑦.

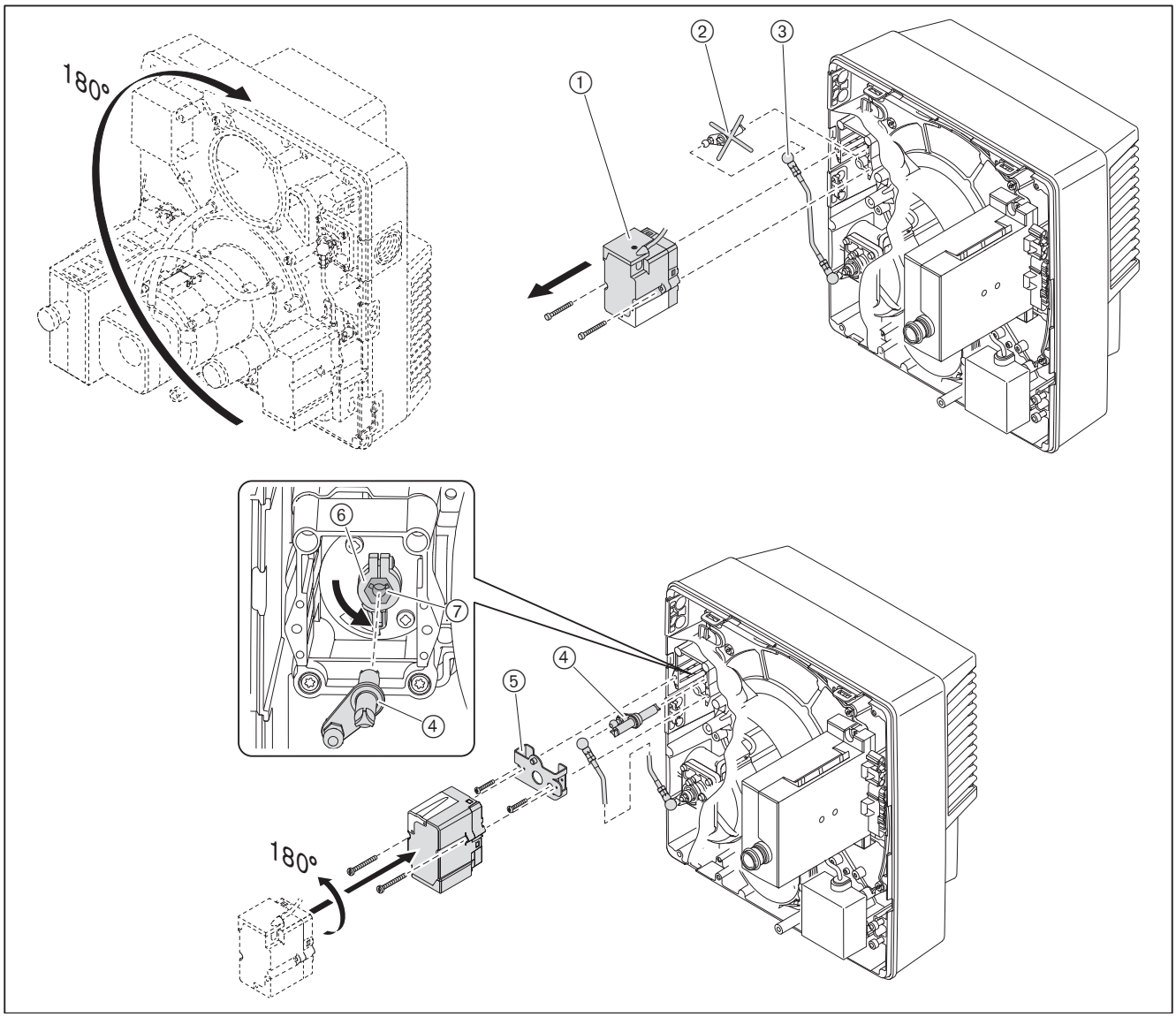

- ▶ Rotate burner flange ① 180° and mount with flange gasket.
- ▶ Rotate burner 180° and fit screws ② to burner flange.
- ▶ The aperture between flame tube and refractory should be filled with flame-proof, resilient insulating material (do not make solid).

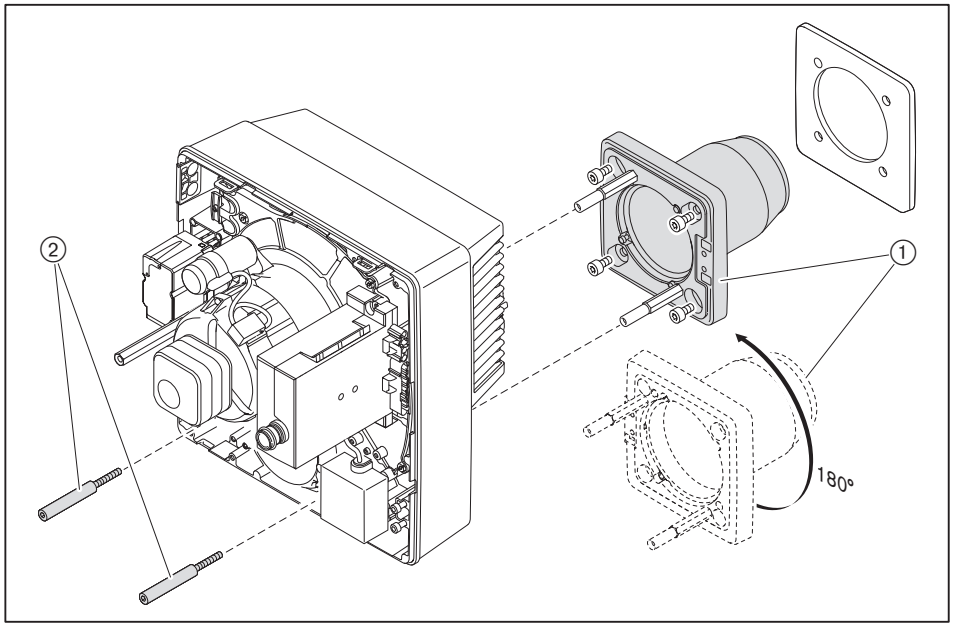

- ▶ Check setting of electrodes [ch. 9.5].
- ▶ Fit mixing head [ch. 9.3].

5 Installation

5.1 Gas supply



DANGER

Risk of explosion due to leaking gas
Gas leaks can lead to a build-up of explosive gas/air mixture. With an ignition source present this can result in an explosion.
- ► Install gas supply with care.
- ► Observe all safety instructions.

Only a competent installation company may carry out the installation of the gas pipe system, including the gas ball valve upstream of the gas appliance. Observe local regulations.

All work downstream from the gas ball valve may be carried out by a contract installation company or a service-/qualified subcontractor for gas appliances in accordance with DVGW G 676.

Ask the gas supply company to specify the following:
- Type of Gas
- Gas connection pressure
- Calorific value in normal condition [kWh/m^3]

Observe maximum permissible pressure of all components of the gas valve train.

- ► Close all fuel shut off devices prior to commencing work and protect from accidental re-opening.

General installation instructions

- Install manually operated shut off device (gas isolation valve) in the supply.
- Ensure correct mounting alignment and cleanliness of sealing surfaces.
- Mount valve train free of vibration. It must not be allowed to swing. Suitable supports should be fitted.
- Mount gas valve train free of stresses.
- The distance between burner and Multifunction assembly should be as small as possible. If the distance is too great, it is possible that a gas/air mixture is formed, which will influence burner start.
- Observe sequence and flow direction of gas valve train.
- If necessary, fit thermal shut off device (TAE) in front of the gas isolation valve.

Installation position

Multifunction assembly can be installed with the axis standing vertical to lying horizontal.

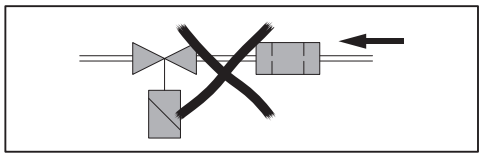

5.1.1 Installing the gas valve train

Only in conjunction with W-MF and gas connection pressure > 150 mbar
If the gas connection pressure is > 150 mbar, a pressure regulator has to be fitted upstream of the W-MF.
► Installing the gas valve train, see additional sheet (Print No. 835109xx).

Installing the valve train from the right

► Remove protective film and closing plug.
► Mount gas valve train free of stresses. Do not compensate for installation errors by over-tightening the flange screws.
► Ensure correct alignment of flange seals.
► Tighten screws evenly diagonally across.

No additional sealant is required if the thread is coated in blue.

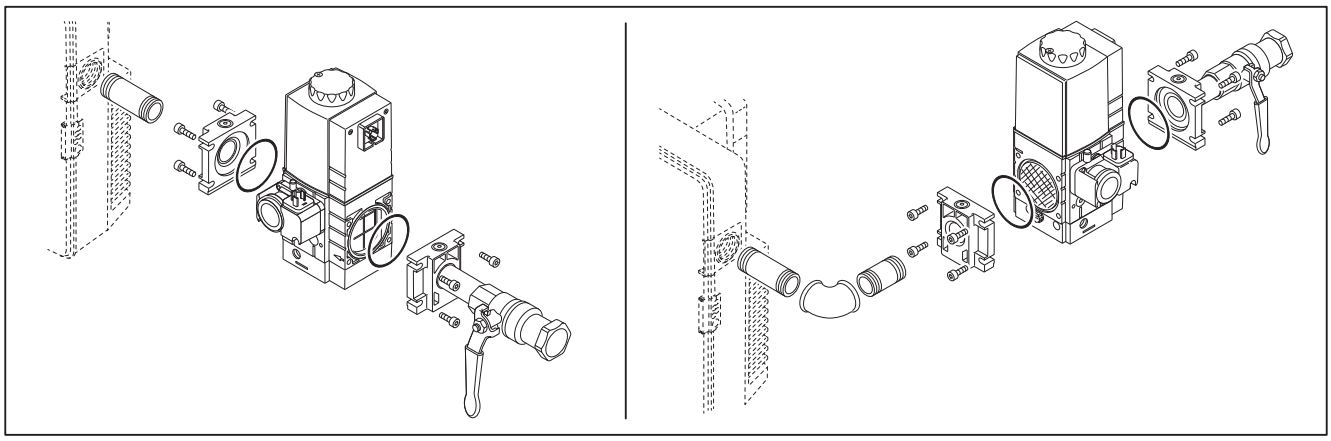

Installing the gas valve train from the left

To fit the gas valve train to the burner from the left, the burner has to be installed rotated by 180°. To do this, additional conversion measures are required.

Move the gas pressure switch prior to installing the multifunction assembly:
- ► Remove closing plug ① and gas pressure switch ③.
- ► Mount gas pressure switch ③ and O ring ② on the opposite side.
- ► Mount closing plug ① on the opposite side.

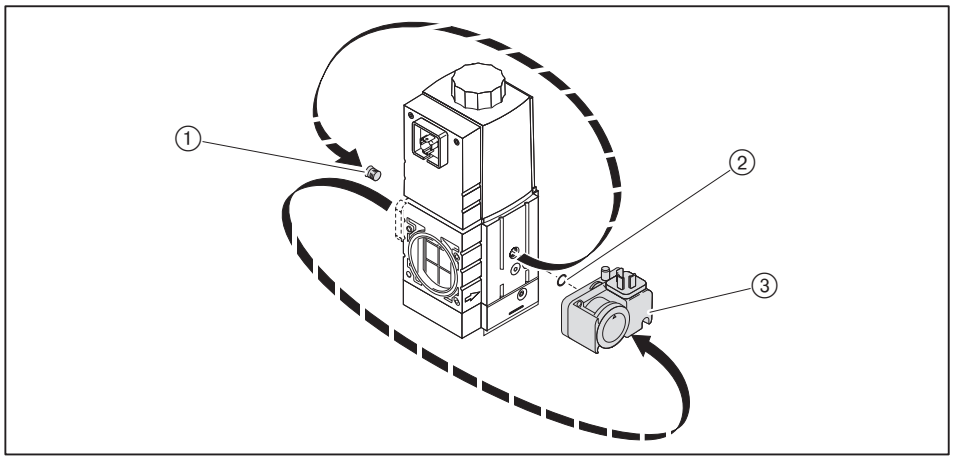

- ► Continue installation in the same way as for "Mount gas valve train from the right".

Accessories

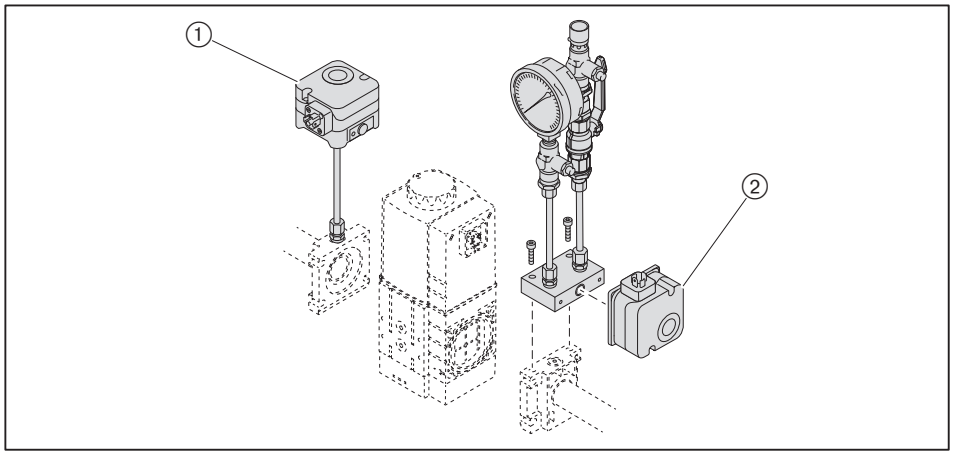

① High gas pressure switch with mechanical interlock (B33)
② Low gas pressure switch with mechanical interlock (B34)

5.1.2 Carry out soundness test of gas supply line and vent

Only a competent installation company may carry out the soundness test and vent the gas pipe system.

5.2 Electrical connection

WARNING

Risk of electric shock
Working on the device when voltage is applied can lead to electric shock.
- ► Isolate the device from the power supply prior to starting any work.
- ► Safeguard against accidental restart.

The electrical connection must only be carried out by qualified electricians.
Observe local regulations.

For single stage operation, a bridge has to be connected in the connection plug ④ supplied as per wiring diagram.

Observe wiring diagram [ch. 11.1].

- ► Plug in plug for gas pressure switch ② and double gas valve ③ and secure with screws.
- ► Check polarity and wiring of 7 pole connection plug ①.
- ► Plug in connection plug ①.
- ► Check polarity and wiring of 4 pole connection plug ④.
- ► Plug in connection plug ④.

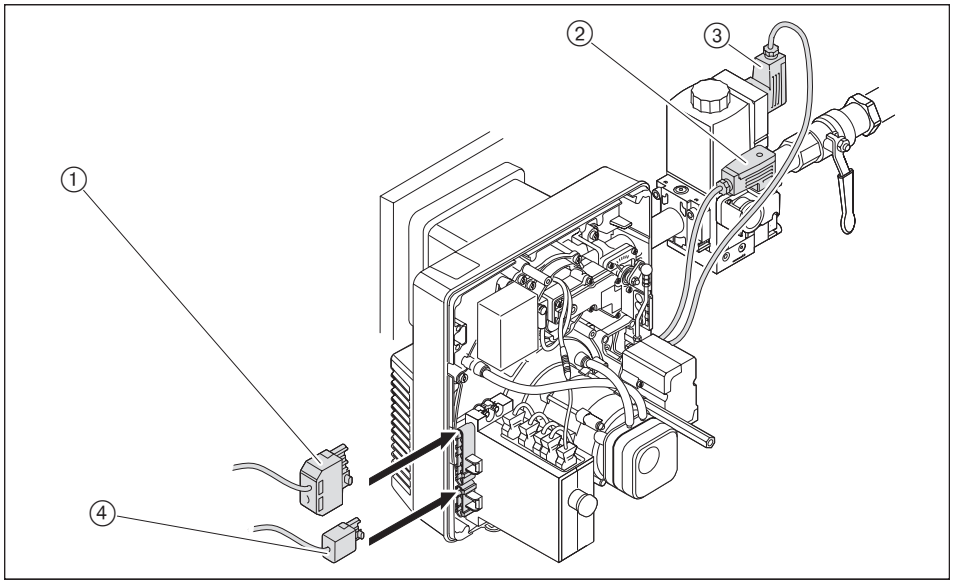

With remote reset, install connection line separately, do not exceed maximum cable length of 10 metres.

6 Operation

6.1 Operating panel

NOTICE	**Damage to the combustion manager due to incorrect operation** Excessive pressure applied to the illuminated push button can damage the combustion manager. ► Only lightly press illuminated push button.

The illuminated push button on the combustion manager has the following functions:
- Display operating condition [ch. 6.2]
- Display fault codes [ch. 10.1.2]
- Reset burner lockout [ch. 10.1.2]

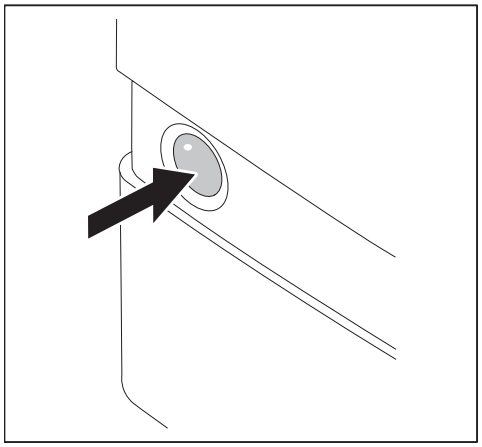

Re-starting the burner during burner operation:
► Press illuminated push button for 1 second.

6.2 Display

Illuminated push button	Operating condition
orange	Start phase
Flashing orange	Ignition and pre-purge phase
Green	Operation
red	Fault [ch. 10]

Additional flashing signals can be read off as fault code [ch. 10].

7 Commissioning

7.1 Prerequisite

Commissioning must only be carried out by qualified personnel.

Only correctly carried out commissioning ensures the operational safety.



Do not operate the burner outside of the capacity graph [ch. 3.4.6].

► Prior to commissioning ensure that:
- all assembly and installation work has been carried out correctly
- sufficient combustion air is available and, if necessary, a ducted air intake is installed
- the annulus between flame tube and heat exchanger is filled
- the heat exchanger is filled with medium
- the regulating, control and safety devices are functioning and set correctly
- the flue gas ducts are unimpeded
- a measuring point conforming to standards is available to measure the flue gas
- the heat exchanger and flue gas ducting up to the test point are sound, as extraneous air influences the test results
- the operating instructions of the heat exchanger are complied with
- a heat demand is available

Additional system-related tests could be necessary. Please observe the operating guidelines for the individual components.

On installations with process equipment, the conditions for safe operation and commissioning must be met, see worksheet 8-1 (Print No. 831880xx).

7.1.1 Connect measuring devices

Measuring device for ionisation current

- ▶ Remove ionisation cable from the plug coupling.
- ▶ Connect ammeter in series.

Ionisation current

Extraneous light detection from	0.8 µA
Minimum ionisation current	1.5 µA
Recommended ionisation current	5 … 20 µA

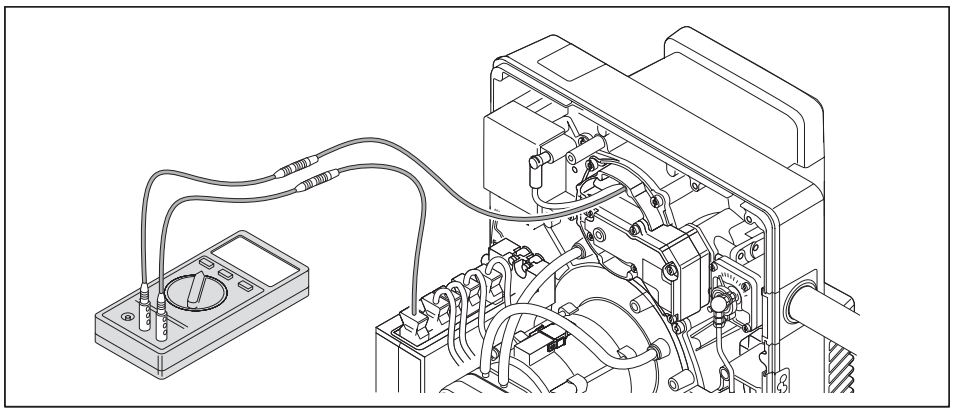

Pressure measuring device for mixing pressure

- ▶ Open test point for mixing pressure ① and connect pressure measuring device.

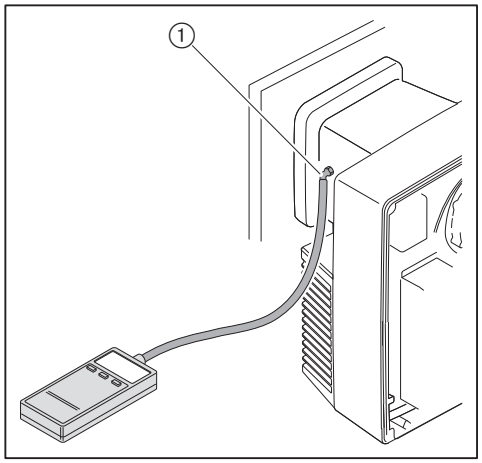

7.1.2 Check gas connection pressure

Minimum connection pressure

Add the combustion chamber pressure in mbar to the minimum connection pressure. The connection pressure should not fall below 15 mbar.

► Determine minimum connection pressure for low pressure installations from table [ch. 7.1.5].

Maximum connection pressure

Maximum connection pressure into isolation valve is 300 mbar.

Check connection pressure

DANGER

Risk of explosion due to excess gas supply pressure
Exceeding the maximum connection pressure (see name plate) can damage the gas valve train and lead to an explosion.
Max. connection pressure see name plate.
► Check gas connection pressure

Only in conjunction with W-MF and gas connection pressure > 150 mbar
The pressure measuring device must be connected to the pressure regulator.
► Check gas connection pressure, see additional sheet (Print No. 835109xx).

► Connect pressure measuring device to test point ①.
► Slowly open isolation valve whilst observing the pressure increase.

If the connection pressure exceeds the max. connection pressure:
► Immediately close isolation valve.
► Do not start plant.
► Notify system operator.

If the connection pressure does not maintain the min. connection pressure:
► Do not start plant.
► Notify system operator.

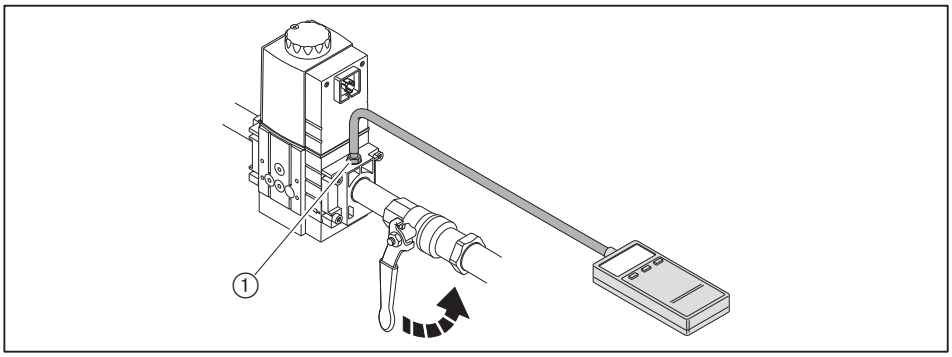

7.1.3 Check soundness of gas valve train

Carry out soundness test:
- prior to commissioning
- after all service and maintenance work

	First test phase	Second and third test phase
Test pressure	100 mbar ±10 %	100 mbar ±10 %
Waiting time for pressure equalisation	5 minutes	5 minutes
Test time	5 minutes	5 minutes
Permissible pressure loss	1 mbar	5 mbar

First test phase

Only in conjunction with W-MF and gas connection pressure > 150 mbar
In the first test phase, the testing device must be connected to the pressure regulator.
► Check soundness of gas valve train, see additional sheet (Print No. 835109xx).

In the first phase the valve train section from the gas isolation valve up to the first valve of the multifunction assembly is tested.

► Switch off burner.
► Close gas isolation valve.
► Connect test equipment.
► Open test point between valve 1 and valve 2.
► Carry out test to table.

Second test phase

In the second phase the interspace in the multifunction assembly is tested.

► Connect test equipment.
► Carry out test to table.

Third test phase

In the third phase the valve train section from the multifunction assembly up to the gas butterfly valve is tested.

- ► Remove mixing head [ch. 9.3].
- ► Fit blanking plate ④.
- ► Fit mixing head.
- ► Connect test equipment.
- ► Carry out test to table.
- ► Close all test points.
- ► Remove blanking plate.

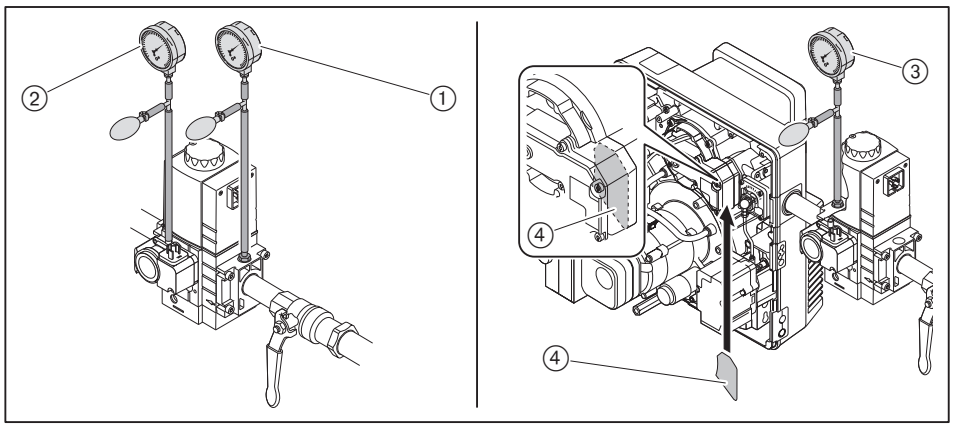

① First test phase
② Second test phase
③ Third test phase
④ Blanking plate

Fourth test phase

In the fourth test phase, the joint to the mixing head ① is tested for soundness. The test phase can only be carried out during or after burner commissioning.
A leak detecting spray or electronic gas detector should be used for testing.

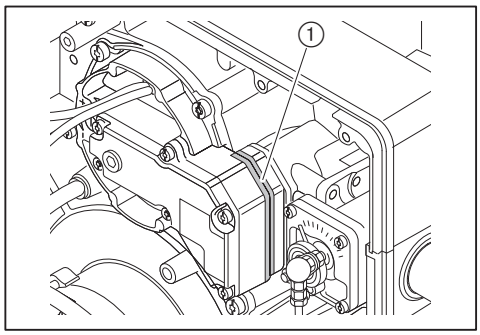

Use only leak detecting foam solutions, which do not cause corrosion, see DVGW-TRGI, worksheet G 600.

- ► Check all components, intersections and test points of the gas valve train between multifunction assembly and burner.
- ► Document result of the soundness test on the engineer's report.

Test points

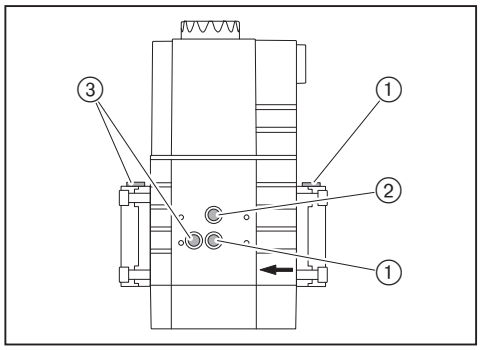

① Pressure into valve 1
② Pressure between valve 1 and valve 2
③ Pressure after valve 2

7.1.4 Purging the gas valve train

- ▶ Open test point into valve 1 [ch. 7.1.3].
- ▶ Connect an approved vent hose to the test point.
- ▶ Vent hose must lead to atmosphere.
- ▶ Slowly open gas isolation valve.
- ✓ The gas/air mixture in the valve train vents via the hose to safe atmosphere.
- ▶ Close gas isolation valve.
- ▶ Remove vent hose and immediately close test point.
- ▶ Use a test burner to ensure no air is present in the valve train.

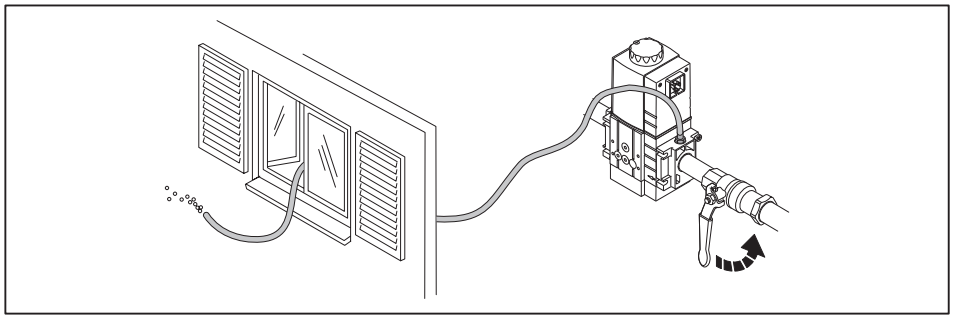

7.1.5 Preset pressure regulator

Determine setting pressure

Add the combustion chamber pressure in mbar to the setting pressure into the gas butterfly valve.

► Determine setting pressure from the table and note down.

The details given for calorific value H_i relate to 0 °C and 1013 mbar.

The table values have been calculated under ideal conditions. The values are therefore guide values for basic settings.

Full load [kW]	**Setting pressure into gas butterfly valve [mbar]**	**Min. connection pressure into isolation valve [mbar]** (low pressure supply)	
Nominal diameter valve train		¾"	¾"
Multifunction assembly W-MF SE		507	507
Ball valve		¾"	1"
	Natural Gas E: H_i = 10.35 kWh/m³, d = 0.606		
40	6.2	10	10
50	6.4	10	10
60	6.4	10	10
70	6.6	10	10
80	7.0	10	10
90	7.2	11	11
100	7.4	12	11
110	7.6	13	12
	Natural Gas LL: H_i = 8.83 kWh/m³, d = 0.641		
40	7.9	12	12
50	8.6	12	12
60	7.4	12	12
70	7.9	12	12
80	8.5	13	13
90	8.6	14	14
100	9.4	15(1	14
110	9.6	16(1	15
	Liquid Petroleum Gas: H_i = 25.89 kWh/m³, d = 1.555 The selection is calculated for Propane, it can however, also be used for Butane.		
40	4.3	8	–
50	4.0	8	–
60	4.7	9	–
70	5.4	9	–
80	5.8	10	–
90	6.6	11	–
100	7.2	12	–
110	7.8	12	–

(1 Not TRGI compliant.

Preset setting pressure

Only in conjunction with W-MF and gas connection pressure > 150 mbar
The pre-pressure must be set to approx. 90 mbar.
► Set FRS pressure regulator, see additional sheet (Print No. 835109xx).

► Preset setting pressure determined at multifunction assembly.

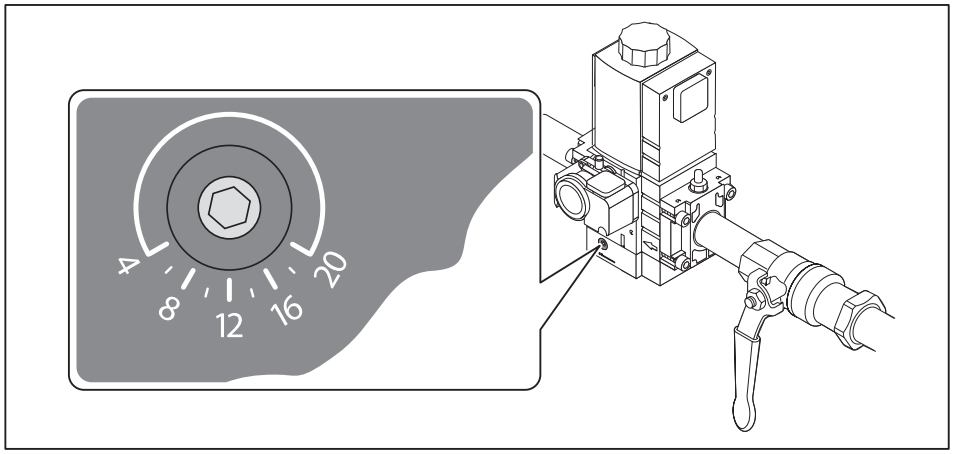

7.1.6 Setting values

Set mixing head relative to the combustion heat rating required. For this, the diffuser setting and the air damper setting should be matched.

Determine diffuser and air damper settings

Do not operate the burner outside of the capacity graph [ch. 3.4.6].

► Determine the diffuser setting (dimension X) and air damper setting required from the diagram and note down.

Example

	Example 1	Example 2
Burner capacity required	55 kW	95 kW
Combustion chamber pressure	0.9 mbar	1.4 mbar
Diffuser setting (dimension X)	0 mm	7.4 mm
Air damper setting	34°	> 80°

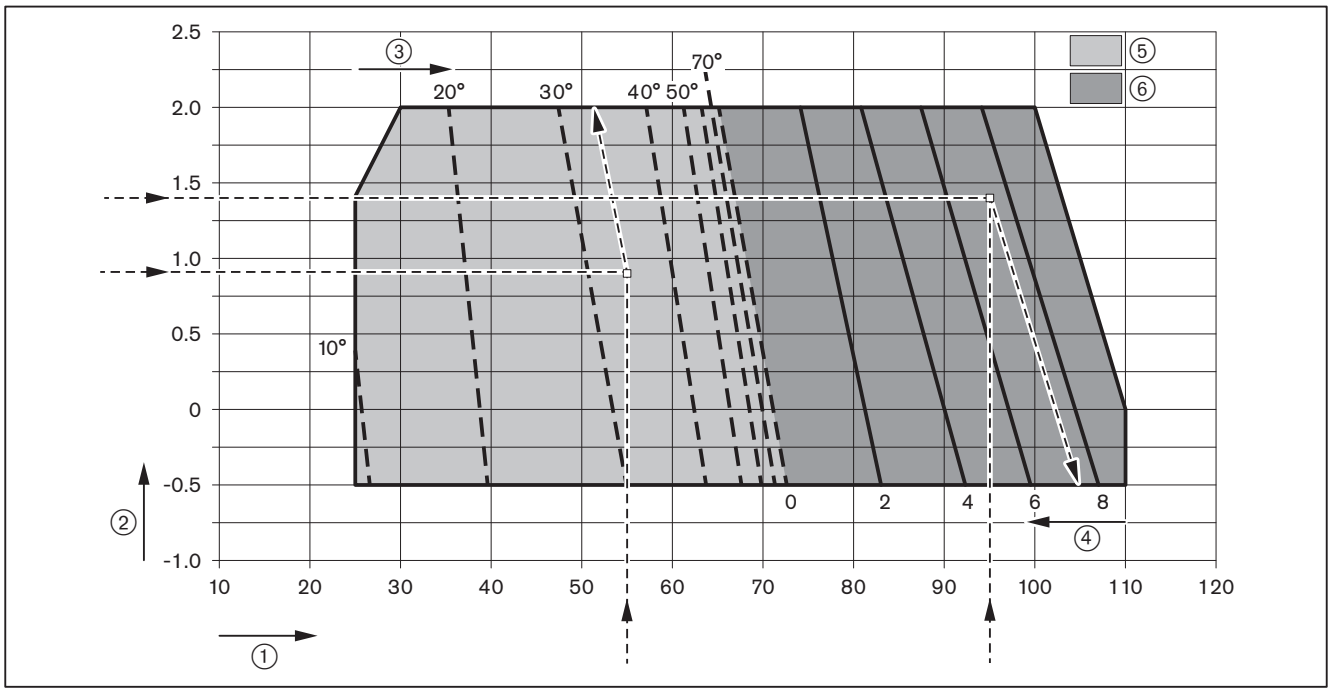

① Combustion heat rating [kW]
② Combustion chamber pressure [mbar]
③ Air damper setting
④ Diffuser setting (dimension X) [mm]
⑤ Air damper setting range with diffuser setting closed (X = 0 mm)
⑥ Setting range dimension X with air damper setting > 80°

Set diffuser

With dimension X = 0 mm the indicating bolt is flush with the cover of the nozzle assembly.

► Turn screw ①, until dimension X equals the value determined.

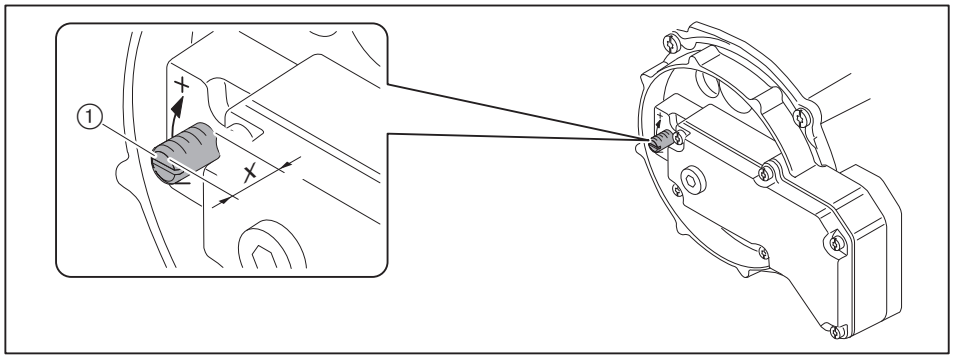

Set air damper limit switch

► Check and if necessary adjust position of limit switches ST0, ST1 and ZL.
► Set air damper setting determined at limit switch ST2.

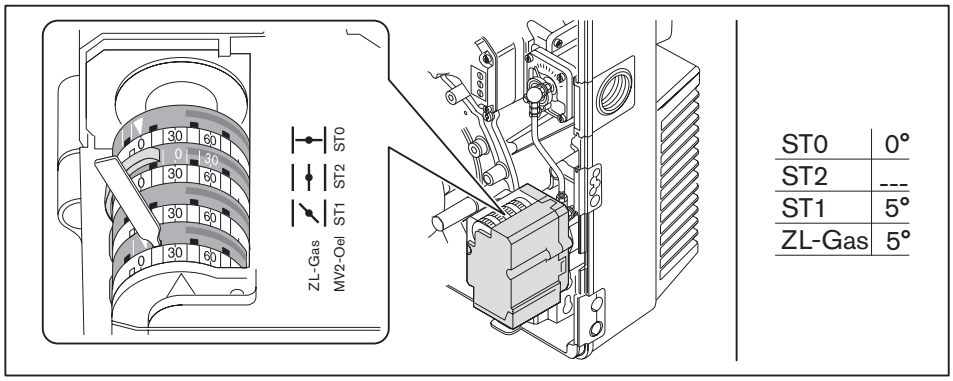

ST0	0°
ST2	---
ST1	5°
ZL-Gas	5°

7.1.7 Preset gas and air pressure switch

The presetting of the pressure switches is only valid during commissioning. Once commissioning has been completed the pressure switches must be set correctly [ch. 7.3].

Air pressure switch	approx. 3.5 mbar
Low gas pressure switch/valve proving gas pressure switch	12 mbar
High gas pressure switch (optional)	approx. twice control pressure

7.2 Adjusting the burner

WARNING

Risk of electric shock
Touching the ignition device can lead to electric shock.
► Do not touch ignition device during the ignition process.

► Check flame signal during commissioning [ch. 7.1.1].

1. Check sequence of operation

► Open gas isolation valve.
✓ Pressure in gas valve train increases.
► Close isolation valve.
► Switch on voltage supply.
✓ Illuminated push button lights up red.
► Press illuminated push button for 1 second.
✓ Burner starts in accordance with the programme sequence [ch. 3.3.4].
► Check sequence of operation:
- Valves open.
- Gas pressure switch reacts.
- Burner start is interrupted.
- Low gas programme starts, the illuminated button flashes red.

2. Adjust setting pressure

► Open test point for setting pressure and connect pressure measuring device.

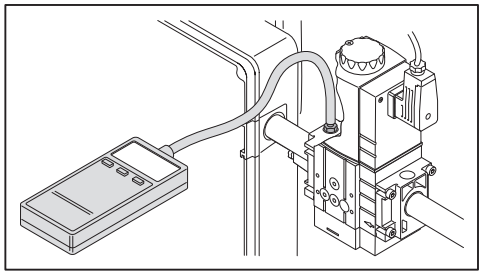

► Open gas isolation valve.
► Unplug 4 pole connection plug.
► Press illuminated push button on combustion manager.
✓ Low gas program is reset.
✓ Burner starts in line with the sequence of operation and stops in ignition load ZL Gas equal to partial load ST1.
► Preset setting pressure determined at multifunction assembly [ch. 7.1.5].

3. Adjust ignition load

► Check combustion values in ignition load.
► Set O_2 content of 4 … 5 % via gas butterfly valve screw 1.

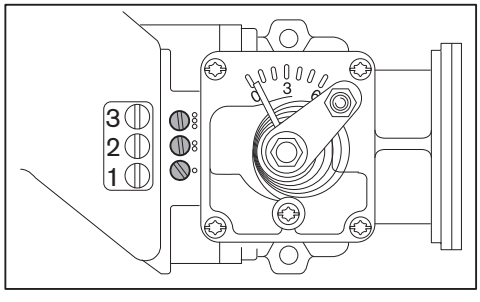

4. Adjust full load

► Select variation 1 or 2 depending on rating selected from setting diagram:

	Variation 1	Variation 2
Setting diagram		
Actuator	less than 80°	greater than 80°
Diffuser	0 mm	greater than 0 mm
Set combustion via:	Multifunction assembly setting pressure	Diffuser
Set capacity via:	Air damper setting ST2	Multifunction assembly setting pressure

Heat demand required for full load (contact T6/T8 closed).
► Plug in 4 pole connection plug.
✓ Burner drives to full load.

If the burner is operated with a hydrogen content of > 10 % in the natural gas, observe the supplementary manual with hydrogen content (Print No. 835927xx).

When adjusting, the ratings data given by the boiler manufacturer and the capacity graph of the burner should be observed [ch. 3.4.6].

Variation 1

Exit full load, if the air damper setting has to be adjusted. Any adjustment to the air damper setting for full load must be made in partial load.

► Check CO content of combustion and if necessary adjust combustion via the multifunction assembly setting pressure.
► Calculate gas throughput (operating volume V_B) required [ch. 7.6].
► Optimise air damper setting ST2 until gas throughput (V_B) is achieved.
► Check combustion values.
► Determine combustion limit and set excess air via multifunction assembly setting pressure [ch. 7.5].
► Determine gas throughput once more and adjust if necessary.
► Re-set excess air.

Variation 2

► Check CO content of combustion and if necessary adjust combustion values via diffuser.
► Calculate gas throughput (operating volume V_B) required [ch. 7.6].
► Optimise setting pressure until gas throughput (V_B) is achieved.
► Check combustion values.
► Determine combustion limit and set excess air via diffuser [ch. 7.5].
► Determine gas throughput once more and adjust if necessary.
► Re-set excess air.

5. Adjust partial load

The following steps must only be carried out for two stage operation. For single stage operation continue with step 7.

Exit partial load, if the air damper setting has to be adjusted. Any adjustment to the air damper setting for partial load must be made in full load.

- ► Define partial load whilst:
  - observing data provided by boiler manufacturer
  - observing the burner capacity graph [ch. 3.4.6]
- ► Set partial load via limit switch ST1.
- ► Unplug 4 pole connection plug.
- ✓ Burner drives to partial load.
- ► Check combustion values.
- ► Determine combustion limit and if necessary re-set excess air via gas butterfly screws.
- ► Observe operational range of gas butterfly screws.

screw	Operational range
3	50° … 80°
2	20° … 50°
1	0° … 20°

Factory setting: 3 rotations OPEN.

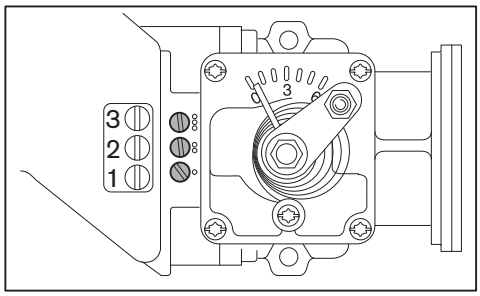

- ► Determine gas throughput and if necessary adjust.
- ► Re-set excess air.

6. Check full load

Adjustments to the gas setting screws in partial load can lead to combustion value changes in full load.

- ► Drive to full load.
- ► Check combustion values and if necessary adjust via gas setting screws whilst observing the operational range of the gas butterfly screws.

7. Check start behaviour



For single stage operation only
If changing the ignition load setting ZL Gas, set limit switch ST1 to the same value as ZL Gas.

- ► Switch off and restart burner.
- ► Check start behaviour and if necessary correct ignition position.

If the ignition position has been altered:

- ► Re-check start behaviour.

7.3 Set pressure switches

7.3.1 Set gas pressure switch

Low gas pressure switch/valve proving gas pressure switch

The switch point must be checked and if necessary adjusted during commissioning.

- ► Connect pressure measuring device to test point ① of the low gas pressure switch.
- ► Start burner and drive to full load.
- ► Slowly close gas isolation valve until either:
  - the O_2 content in the flue gas increases to above 7 %
  - the flame stability worsens considerably
  - the CO content increases
  - the gas pressure reaches 12 mbar
  - or the gas pressure drops to 50 %
- ► Determine gas pressure.
- ► Slowly open gas isolation valve.
- ► Set the pressure determined as switch point at the setting cam ②, minimum value 12 mbar.

Check switch point

- ► Restart the burner.
- ► Slowly close gas isolation valve.
- ✓ If the low gas program starts, the gas pressure switch has been set correctly.
- ✓ If a lockout occurs or if the combustion reaches a critical condition, the low gas pressure switch reacts too late.

If lockout occurs:

- ► Increase switch point at setting cam ②.
- ► Slowly open gas isolation valve.
- ► Re-check switch point.

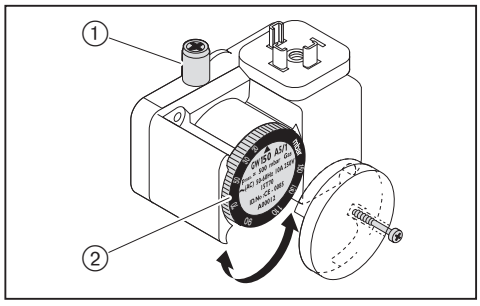

Set (optional) high gas pressure switch

- ► Set high gas pressure switch to 1.3 × $P_{Gas\ full\ load}$ (gas flow pressure at full load).

7.3.2 Set air pressure switch

The switch point must be checked and if necessary adjusted during commissioning.

- ► Connect pressure measuring device for differential pressure measurement.
- ► Start the burner.
- ► Carry out differential pressure measurement across the whole capacity range of the burner and determine the lowest differential pressure.
- ► Calculate switch point (80 % of release pressure or lowest differential pressure).
- ► Set the switch point determined at the setting cam ①.

Example

Lowest differential pressure	3.2 mbar
Switch point air pressure switch (80 %)	3.2 mbar × 0.8 = 2.6 mbar

Site specific influences on the air pressure, (e. g. by the flue gas system, heat exchanger, installation location or air supply) may make it necessary to vary the setting of the air pressure switch.

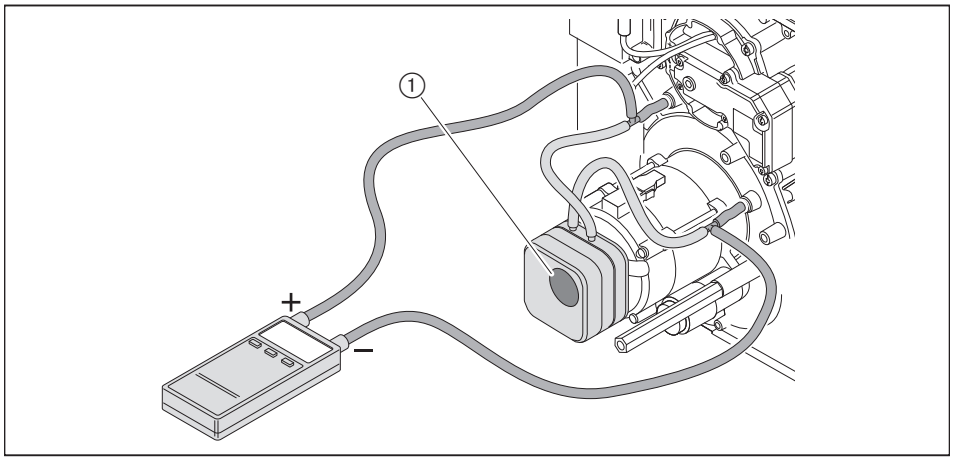

7.4 Concluding work

- ▶ Check control and safety devices.
- ▶ Remove gas pressure measuring devices and close all test points.
- ▶ Conclude valve proving of gas valve train (fourth test phase) [ch. 7.1.3].
- ▶ Enter type and serial number into the text box [ch. 3.2].
- ▶ Enter combustion values and settings in the commissioning record and/or test sheet.
- ▶ Mount cover on burner.
- ▶ Inform the operator about the use of the equipment.
- ▶ Hand the installation and operating manual to the operator and inform him that this should be kept with the appliance.
- ▶ Point out to operator that the installation should be serviced annually.

7.5 Check combustion

If the burner is operated with a hydrogen content of > 10 % in the natural gas, observe the supplementary manual with hydrogen content (Print No. 835927xx).

Determine excess air

- ► Slowly close air damper(s) in the relevant stage, until the combustion limit is reached (CO content approx. 100 ppm).
- ► Measure and document O_2 content.
- ► Read air number (λ).

Increase air number to ensure sufficient excess air:
- by 0.15 … 0.20 (equates to 15 … 20 % excess air)
- by more than 0.20 for more difficult conditions, such as:
  - dirty combustion air
  - fluctuating intake temperature
  - fluctuating chimney draught

Example

$$\lambda + 0.15 = \lambda^*$$

- ► Set air number (λ*), do not exceed CO content of 50 ppm.
- ► Measure and document O_2 content.

Check flue gas temperature

- ► Check flue gas temperature.
- ► Ensure that the flue gas temperature complies with the data provided by the boiler manufacturer.
- ► If necessary adjust flue gas temperature, e. g.:
  - increase burner capacity in partial load to avoid condensation in the flue gas ducts, except on condensing units
  - reduce burner capacity in full load to improve efficiency
  - adjust heat exchanger to the data provided by the manufacturer

Determine flue gas losses

- ► Drive to full load.
- ► Measure combustion air temperature (t_L) near the air damper(s).
- ► Measure oxygen content (O_2) and flue gas temperature (t_A) at the same time at one point.
- ► Determine flue gas losses using the following formula:

$$q_A = (t_A - t_L) \cdot \left(\frac{A_2}{21 - O_2} + B\right)$$

q_A Flue gas losses [%]
t_A Flue gas temperature [°C]
t_L Combustion air temperature [°C]
O_2 Volumetric content of oxygen in dry flue gas [%]

Fuel factors	Natural Gas	Liquid Petroleum Gas
A2	0.66	0.63
B	0.009	0.008

7.6 Calculate gas throughput

Formula symbol	Description	Example values
V_B	Operating volume [m^3/h] Volume measured at gas meter at current pressure and temperature (gas throughput).	–
V_N	Standard volume [m^3/h] Volume gained by gas at 1013 mbar and 0 C.	–
f	Conversion factor	–
Q_N	Heat rating [kW]	200 kW
η	Boiler efficiency (e. g. 92 % ≙ 0.92)	0.92
H_i	Calorific value [kWh/m^3] at 0 °C and 1013 mbar	10.35 kW/m^3 (Natural Gas E)
t_{Gas}	Gas temperature at gas meter [°C]	10 °C
P_{Gas}	Pressure at gas meter [mbar]	25 mbar
P_{Baro}	Barometric air pressure [mbar], see table	500 m ≙ 955 mbar
V_G	Gas throughput determined at gas meter	0.74 m^3
T_M	Measuring time [seconds]	120 seconds

Calculate normal volume

► Calculate the normal volume (V_N) using the following formula.

$$V_N = \frac{Q_N}{\eta \cdot H_i} \qquad V_N = \frac{200\ kW}{0.92 \cdot 10.35\ kW/m^3} = 21.0\ m^3/h$$

Calculate conversion factor

► Determine gas temperature (t_{Gas}) and pressure (P_{Gas}) at gas meter.
► Determine barometric air pressure (P_{Baro}) from table.

Height above sea level [m]	0	100	200	300	400	500	600	700	800	900	1000	1100	1200	1300
P_{Baro} [mbar]	1013	1001	990	978	966	955	943	932	921	910	899	888	877	866

► Calculate conversion factor (f) using the following formula.

$$f = \frac{P_{Baro} + P_{Gas}}{1013} \cdot \frac{273}{273 + t_{Gas}} \qquad f = \frac{955 + 25}{1013} \cdot \frac{273}{273 + 10} = 0.933$$

Calculate operating volume (gas throughput) required

$$V_B = \frac{V_N}{f} \qquad V_B = \frac{21.0\ m^3/h}{0.933} = 22.5\ m^3/h$$

Determine current operating volume (gas throughput)

► Measure gas throughput (V_G) at gas meter, measuring time (T_M) should be a minimum of 60 seconds.
► Calculate operating volume (V_B) using the following formula.

$$V_B = \frac{3600 \cdot V_G}{T_M} \qquad V_B = \frac{3600 \cdot 0.74\ m^3}{120\ s} = 22.2\ m^3/h$$

8 Shutdown

In the event of operational failure:
- ▶ Switch off burner.
- ▶ Close fuel shut off devices.

9 Servicing

9.1 Notes on servicing



DANGER

Risk of explosion due to leaking gas
Improper service work can lead to escaping gas and explosion.
- ► Close fuel shut-off devices and secure against being switched on again unexpectedly prior to commencing work.
- ► Care should be taken when dismantling and assembling gas carrying components.
- ► Close the screws on the test points ensuring the test points are sealed.



WARNING

Risk of electric shock
Working on the device when voltage is applied can lead to electric shock.
- ► Isolate the device from the power supply prior to starting any work.
- ► Safeguard against accidental restart.



WARNING

Risk of electric shock
Touching the ignition device can lead to electric shock.
- ► Do not touch ignition device during the ignition process.



CAUTION

Danger of getting burned on hot components
Hot components can lead to burns.
- ► Do not touch the components.
- ► Allow components to cool.



CAUTION

Risk of injury from sharp edges
Sharp edges on components can cause injury.
- ► Wear protective gloves.
- ► Watch out for sharp edges.



NOTICE

Damage caused by objects in the burner housing
It is possible for objects to fall into the burner housing.
If these objects are not removed, they could damage the burner.
- ► Following servicing, ensure that there are no objects left in the burner housing.

Servicing must only be carried out by qualified personnel. The combustion plant should be serviced annually. Depending on site conditions more frequent checks may be required.

Components, which show increased wear and tear or whose design lifespan is or will be exceeded prior to the next service should be replaced as a precaution.

The design lifespan of the components is listed in the service plan [ch. 9.2].



Weishaupt recommends a service contract be entered into to ensure that the necessary inspections and maintenance work are carried out.

The following components must only be replaced and must not be repaired:
- Combustion Manager
- Flame sensor
- Actuator
- Multifunction assembly
- Pressure regulator
- Pressure switch

Prior to every servicing

- ► Inform the operator about the extent of service work to be carried out.
- ► Switch off mains switch of installation and safeguard against accidental reactivation.
- ► Close fuel shut-off devices and secure against being switched on again unexpectedly.
- ► Remove cover.
- ► Unplug boiler control connection plug from combustion manager.

Following servicing

- ► Check tightness of gas carrying components.
- ► Check function of:
  - Ignition
  - Flame monitoring
  - Gas carrying components (gas connection pressure and setting pressure)
  - Pressure switch
  - Control and safety devices
- ► Check combustion values, if necessary re-adjust the burner.
- ► Enter combustion values and settings in the commissioning record.
- ► Refit cover.

9.2 Service plan

Components	Criteria / design lifespan[1]	Service procedure
Ignition electrode	Soiling	▶ Clean
	Damage / wear	▶ Replace [ch. 9.5] Recommendation: at least every 2 years
Ignition cable	Damage	▶ Replace
Ionisation electrode	Soiling	▶ Clean
	Damage / wear	▶ Replace [ch. 9.5] Recommendation: at least every 2 years
Ionisation cable	Damage	▶ Replace
Flame tube / diffuser	Soiling	▶ Clean
	Damage	▶ Replace
Fan wheel	Soiling	▶ Clean
	Damage	▶ Replace [ch. 9.7]
Air duct	Soiling	▶ Clean
Air damper	Soiling	▶ Clean
Combustion Manager	250 000 burner starts or 10 years[2]	▶ Replace
Breather plug multifunction assembly	Soiling	▶ Replace [ch. 9.14]
Filter insert multifunction assembly	Soiling	▶ Replace [ch. 9.15]
Multifunction assembly with valve testing system (valve proving)	Fault identified	▶ Replace
Gas pressure regulator	Setting pressure	▶ Check [ch. 7.1.5].
	Function / soundness 15 years	▶ Replace
Air pressure switch	Switch point	▶ Check [ch. 7.3] [ch. 7.3.2].
	250 000 burner starts or 10 years[2]	▶ Replace
Gas pressure switch	Switch point	▶ Check [ch. 7.3.1].
	50 000 burner starts or 10 years[2]	▶ Replace

[1] The specified design lifespan applies for typical use in heating, hot-water and steam systems as well as for thermal process systems to EN ISO 13577-2.
[2] If a criterion is reached, carry out maintenance measures.

9.3 Removing and refitting mixing head

Observe notes on servicing [ch. 9.1].

DANGER

Risk of explosion due to leaking gas
It is possible for gas to leak out if the gasket ③ is seated incorrectly.
- ► Following work on the mixing head, ensure the gasket is clean and seated correctly, if necessary replace.
- ► Check for leaks, see Fourth test phase [ch. 7.1.3].

Removing

- ► Unplug ionisation cable ⑤.
- ► Unplug ignition cable ①.
- ► Undo screws ④.
- ► Turn mixing head ② to the left up to the recess and remove.

Refitting

- ► Refit mixing head in reverse order ensuring correct alignment and cleanliness of gasket ③.

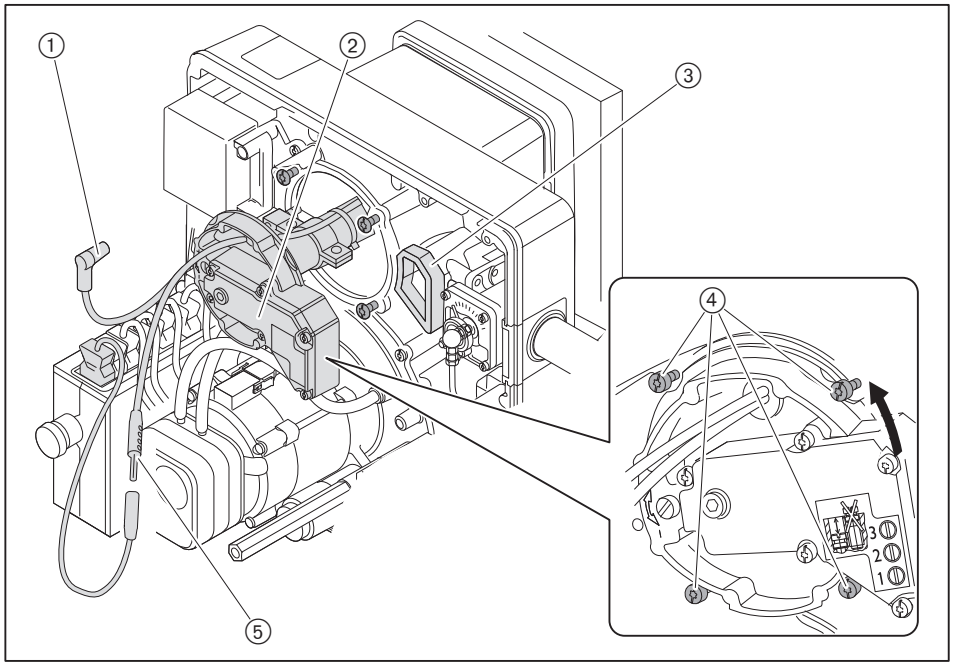

9.4 Set mixing head

Observe notes on servicing [ch. 9.1].

The distance between diffuser and flame tube front edge S1 cannot be measured with the burner mounted. This is only possible indirectly with dimension Lx when the mixing head is removed.

Dimension Lx changes according to the combustion head extension used.

- ► Remove mixing head [ch. 9.3].
- ► Turn setting screw ① until it is flush with the nozzle assembly cover (dimension X = 0 mm).
- ► Check dimension Lx.

If the value measured deviates from dimension Lx:

- ► Undo screws ②.
- ► Adjust flame tube ③ until dimension Lx has been reached.
- ► Re-tighten screws ②.

If the screws ② have been loosened:

- ► Check position of electrodes and gas orifices ④.

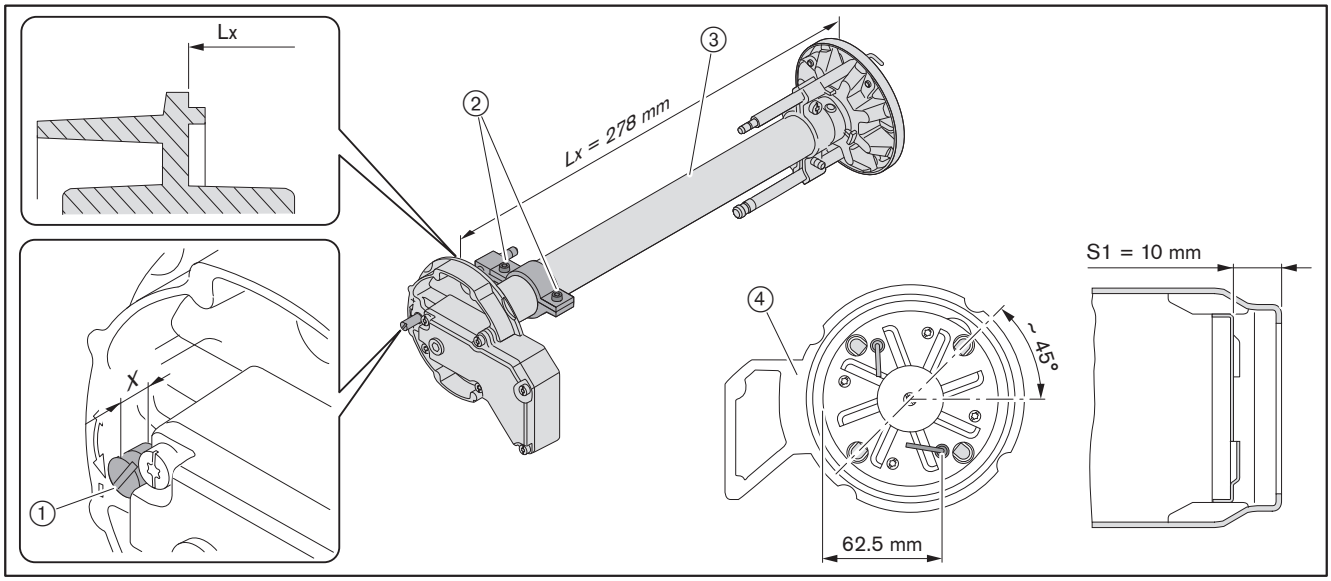

9.5 Set ionisation and ignition electrodes

Observe notes on servicing [ch. 9.1].

- ► Remove mixing head [ch. 9.3].
- ► Undo screw ①.
- ► Set ignition electrode and tighten screw ①.
- ► Undo screw ②.
- ► Set ionisation electrode and tighten screw ②.

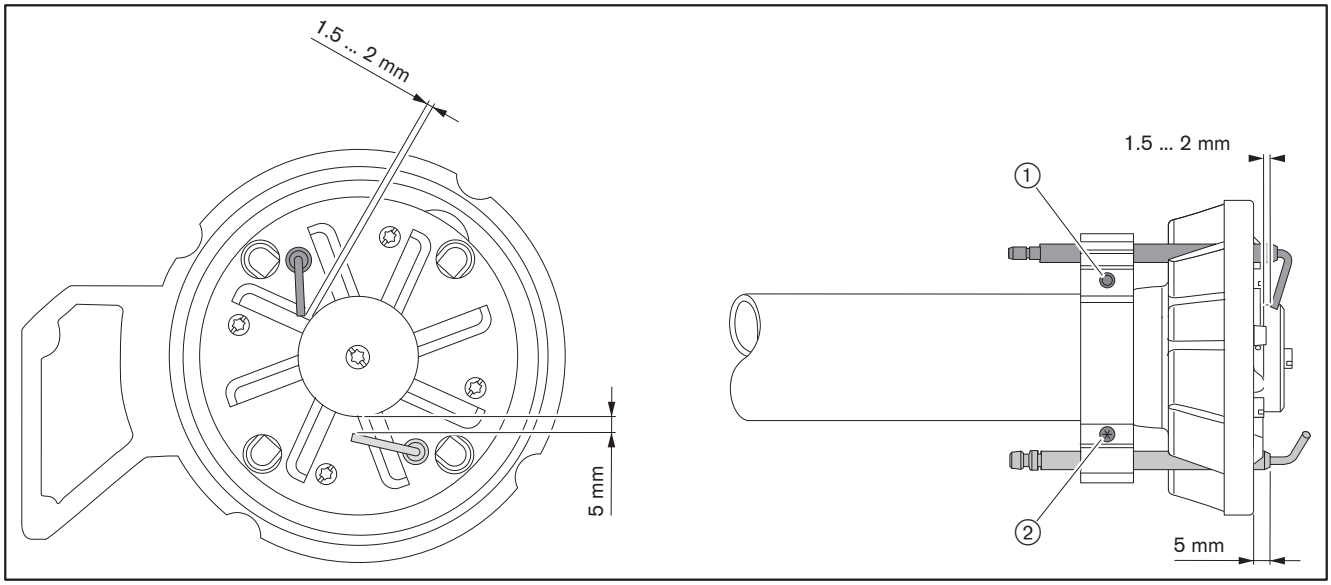

9.6 Service position

Observe notes on servicing [ch. 9.1].

The burner mounted rotated by 180° cannot be placed into the service position.

- ► Remove mixing head [ch. 9.3].
- ► Remove actuator plug ③.
- ► Hold housing cover and remove screws ①.
- ► Place housing cover into service position ②.

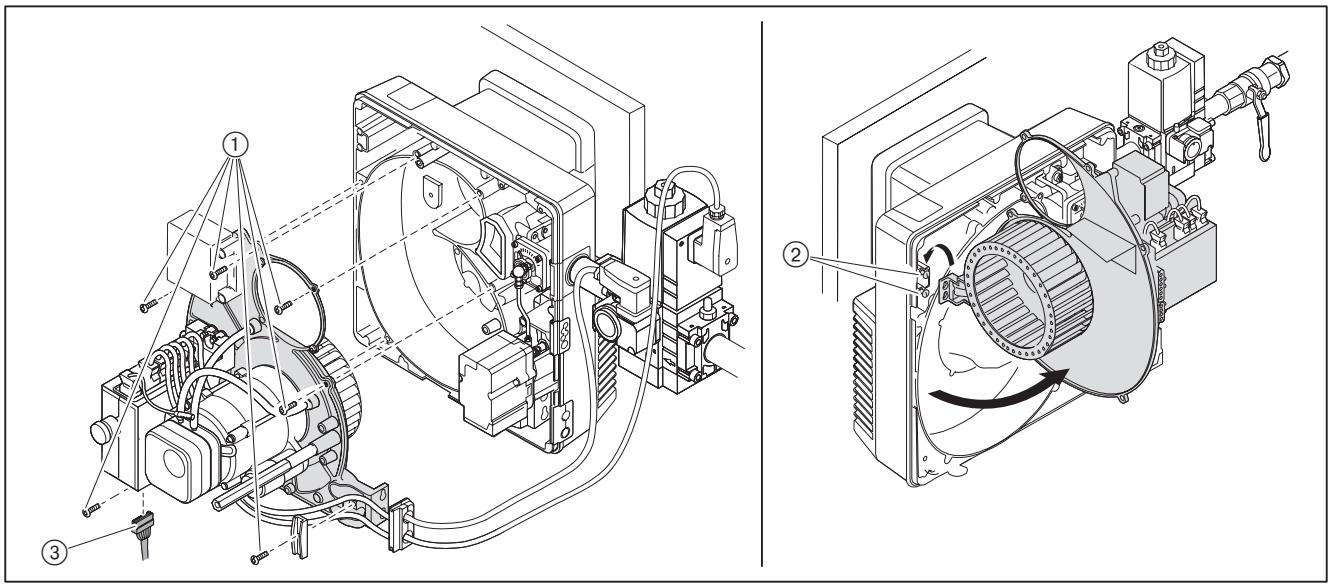

9.7 Removing and refitting fan wheel

Observe notes on servicing [ch. 9.1].

Personal protective equipment must be observed [ch. 2.4.1].

Removing

- ► Place housing cover into service position [ch. 9.6].
- ► Remove grub screw ① and remove fan wheel.

Refitting

- ► Refit fan wheel in reverse order and:
  - ensure correct alignment on the motor shaft ②
  - screw in new grub screw ①
  - turn fan wheel to ensure it moves freely

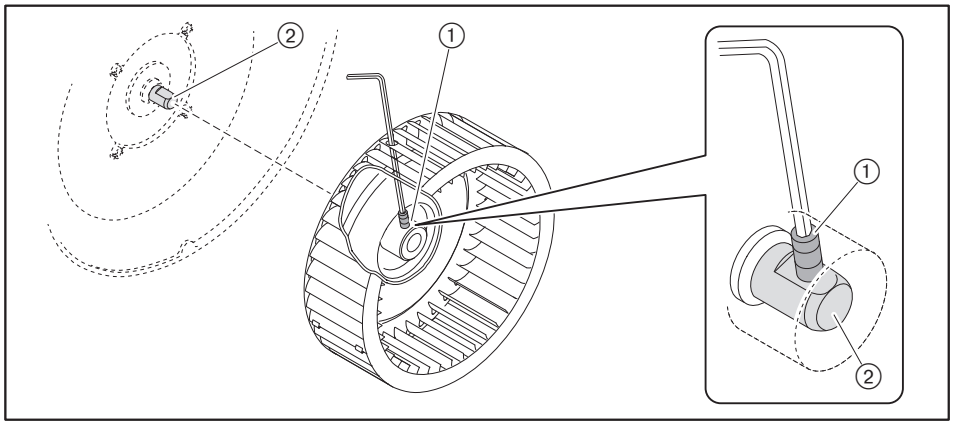

9.8 Remove burner motor

Observe notes on servicing [ch. 9.1].

- ▶ Remove fan wheel [ch. 9.7].
- ▶ Unplug plug number 3 and 11.
- ▶ Disconnect + and - hoses.
- ▶ Undo screws ① and remove air pressure switch.
- ▶ Hold motor and remove screws ②.
- ▶ Remove motor.

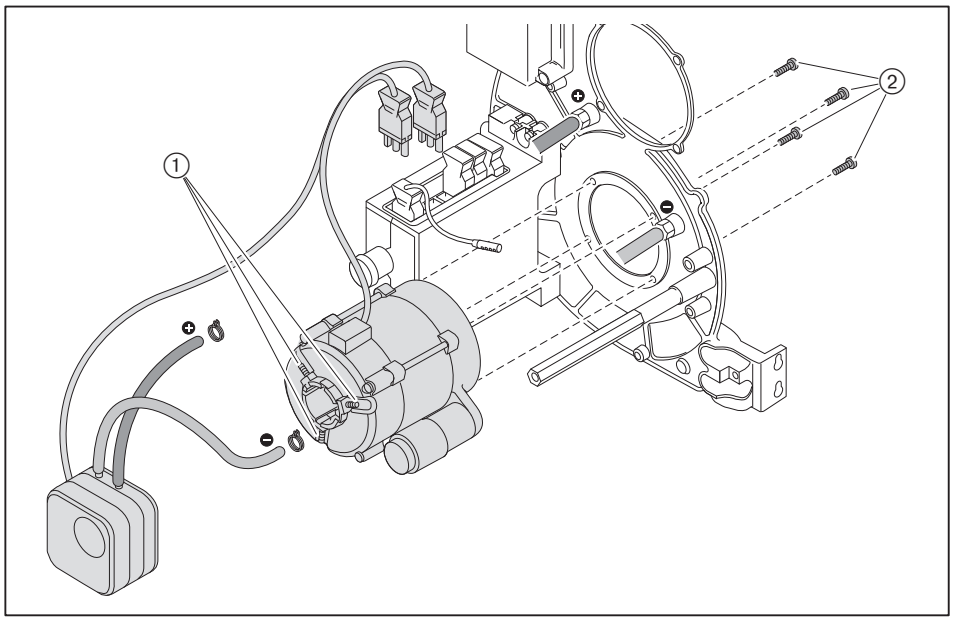

9.9 Removing and refitting air damper actuator

Observe notes on servicing [ch. 9.1].

Removing

- ► Remove actuator plug ① from combustion manager.
- ► Remove screws ②.
- ► Remove actuator.

Refitting

NOTICE

Damage to the actuator caused by turning the hub
Actuator could be damaged.
- ► Do not turn hub manually or with tool.

- ► Place actuator into the star shaped groove ③.
- ► Secure actuator.
- ► Plug in actuator plug ① at the combustion manager.

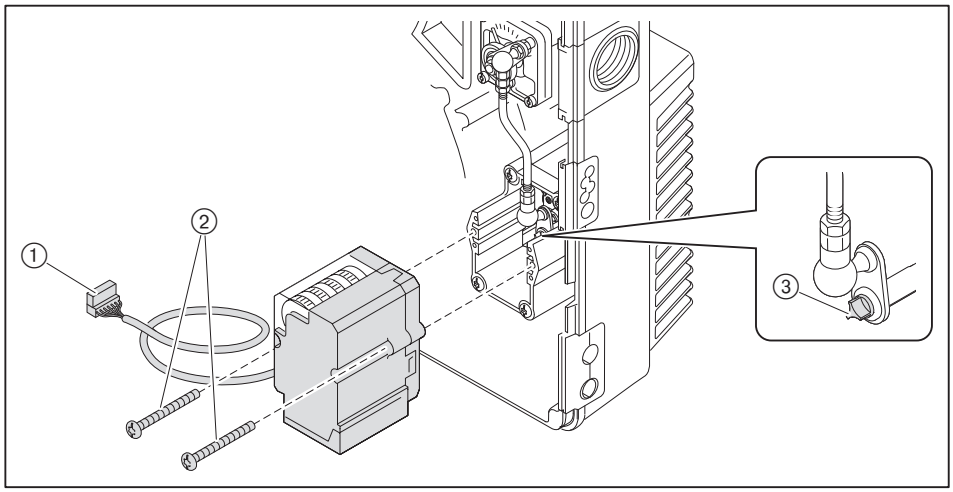

9.10 Removing and refitting angle drive

Observe notes on servicing [ch. 9.1].

Removing

- ► Remove air damper actuator [ch. 9.9].
- ► Pull drive rod ③ from the gas butterfly valve ⑧ and remove.
- ✓ Air damper is opened by the force of the spring.
- ► Remove frame ④.
- ► Remove angle drive ⑤.

Refitting

- ► Remove intake housing [ch. 9.12].
- ► Open air damper ⑥ until position ⑦ has been reached and hold tight.
- ► Fit angle drive to shaft.
- ► Secure angle drive.
- ► Mount intake housing.
- ► Fit frame ④.
- ► Place drive rod ③ into actuator.
- ► Turn indicator ① to CLOSED position and hold.
- ► Place actuator with drive rod ③ into the star shaped groove ② and secure.
- ► Engage drive rod on gas butterfly valve ⑧, ensuring correct alignment.

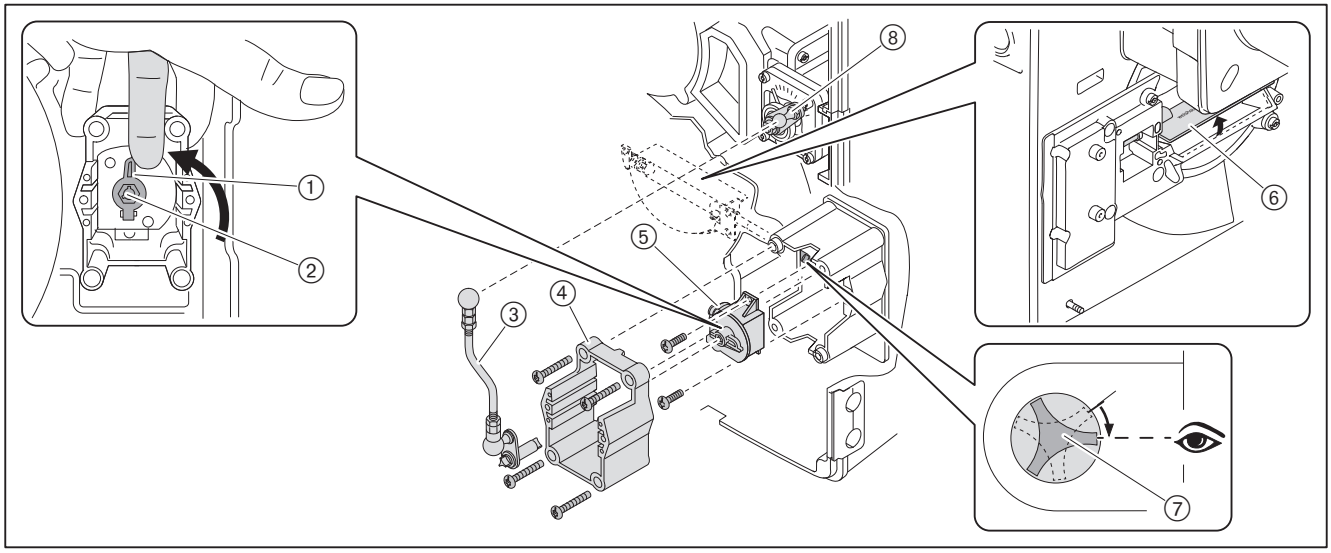

9.11 Removing and refitting gas butterfly valve

Observe notes on servicing [ch. 9.1].

Removing

- ► Remove screws ③.
- ► Unscrew flange with double nipple ④.
- ► Remove mixing head [ch. 9.3].
- ► Remove drive rod ⑥.
- ► Remove screws ① and remove gas butterfly valve ②.

Refitting

- ► Refit gas butterfly valve ② in reverse order and:
  - ensure correct alignment of drive rod ⑥ with gas butterfly valve
  - secure flange to multifunction assembly whilst ensuring correct seating of O ring ⑤ on the flange

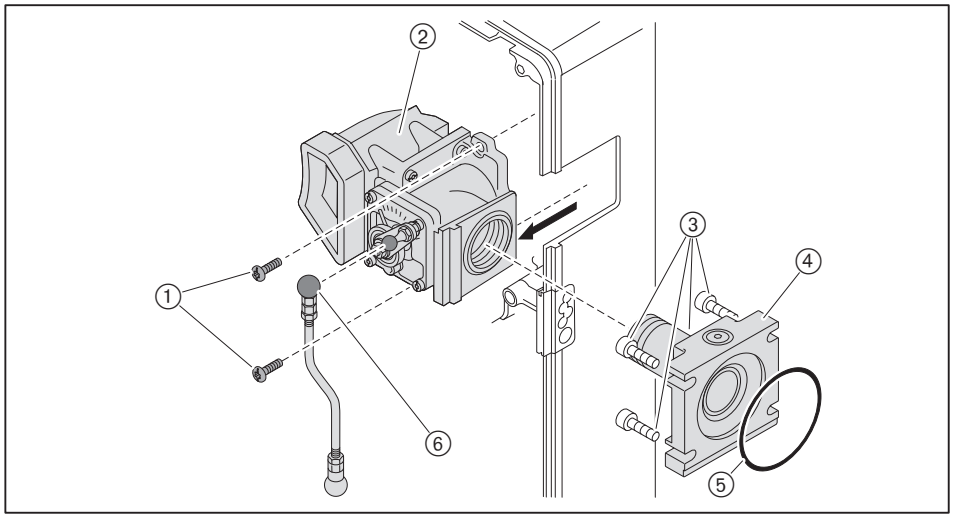

- ► Carry out soundness test [ch. 7.1.3].

9.12 Removing and refitting air regulator

Observe notes on servicing [ch. 9.1].

Removing

- ► Remove bolts ①.
- ► Remove burner from heat exchanger [ch. 4.2].
- ► Remove actuator plug ⑥.
- ► Remove bolts ②.
- ► Remove intake housing ⑤.
- ► Remove bolts ④.
- ► Remove air regulator ③.

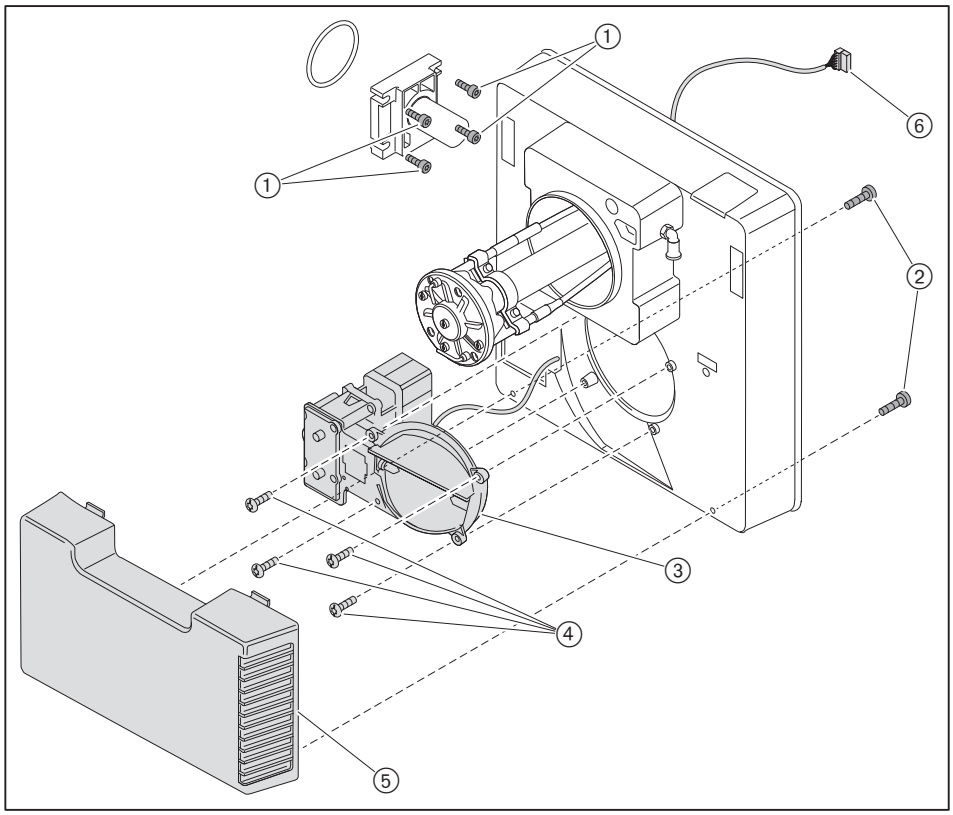

Refitting

- ► Refit air regulator in reverse order.
- ► Carry out soundness test [ch. 7.1.3].

9.13 Replacing coil on multifunction assembly

Observe notes on servicing [ch. 9.1].

Ensure correct voltage and solenoid number when replacing the solenoid coil.

- ► Undo screw ①.
- ► Remove cap ②.
- ► Replace solenoid coil ③.

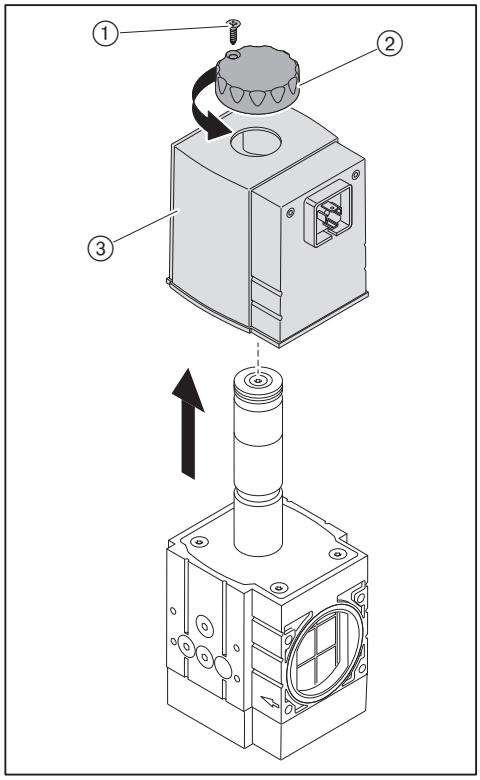

9.14 Replace breather plug of multifunction assembly

Observe notes on servicing [ch. 9.1].

A breather plug with integrated filter is fitted to protect the breather orifice against soiling.

- ► Replace breather plug ①.

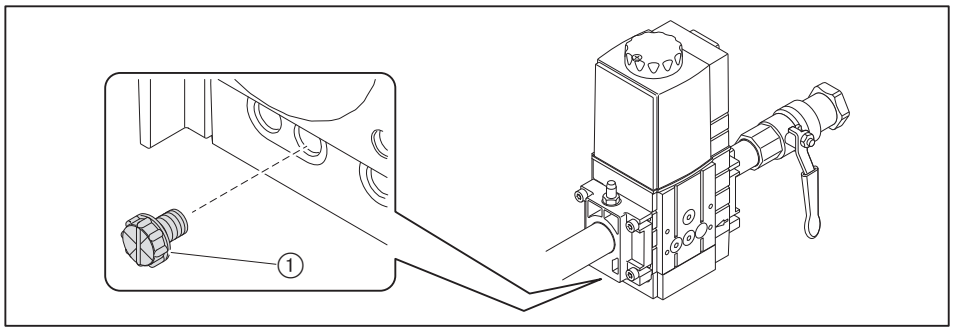

9.15 Removing and refitting filter insert of multifunction assembly

Observe notes on servicing [ch. 9.1].

Ensure no dirt enters the multifunction assembly when removing and replacing the filter insert.

Removing

- ► Remove screws ④.
- ► Remove cover ③.
- ► Remove filter insert ①.
- ► If necessary replace filter insert ① and seal ②.

Refitting

- ► Refit in reverse order ensuring correct alignment of filter ① and seal ②.

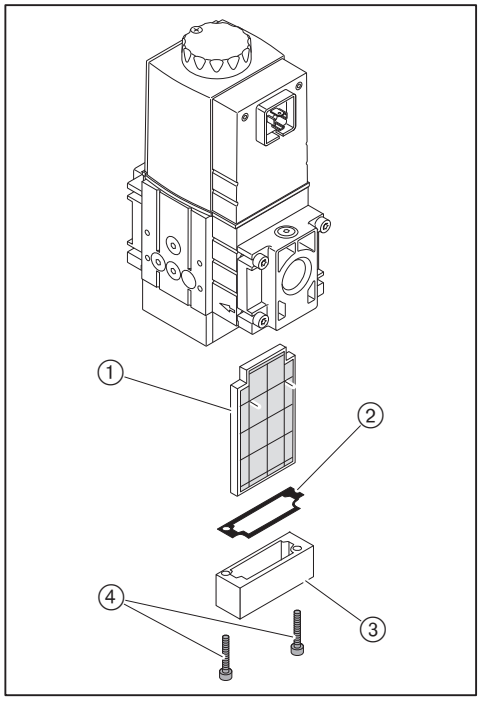

- ► Carry out soundness test [ch. 7.1.3].
- ► Vent gas valve train [ch. 7.1.4].

9.16 Replacing the fuse

Observe notes on servicing [ch. 9.1].

- ► Remove all plugs from the combustion manager.
- ► Remove screws from the combustion manager.
- ► Remove combustion manager.
- ► Replace fuse (T6.3H, IEC 127-2/5).

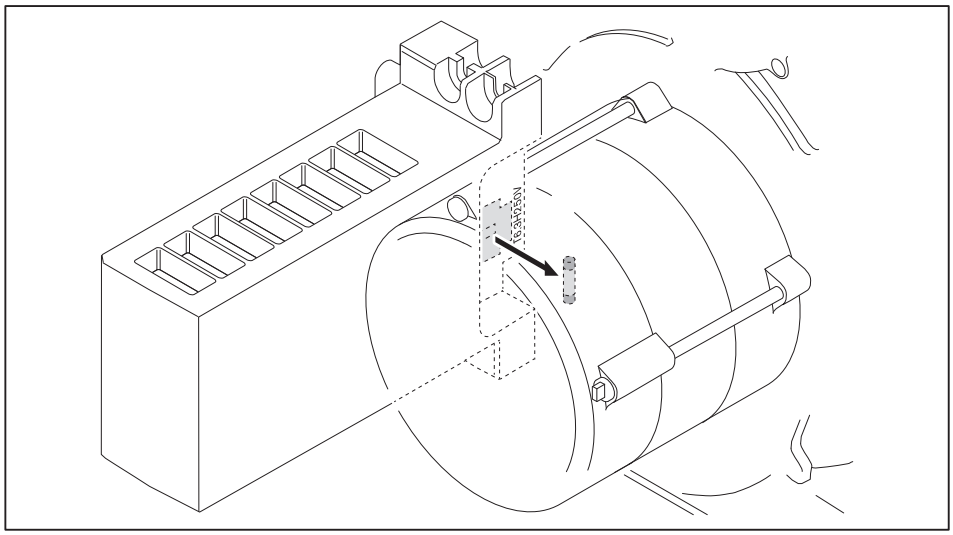

10 Troubleshooting

10.1 Procedures for fault conditions

The combustion manager recognises irregularities of the burner and indicates these with the illuminated push button.

The following conditions can occur:
- illuminated push button off [ch. 10.1.1]
- illuminated push button red [ch. 10.1.2]
- illuminated push button flashes [ch. 10.1.3]

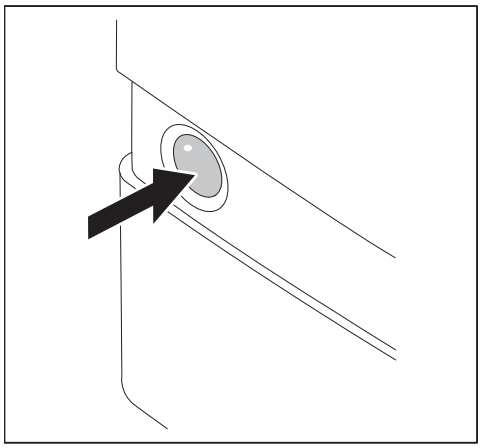

More diagnostic options via the BCI interface, with:
- The display and operating unit (service package operating unit W-FM05/10)
- Interface module OCI410 with software ACS410
- Data protocol converter OCI460 (building management system)

10.1.1 Illuminated push button off

The following faults may be corrected by the operator:

Fault	Cause	Rectification
Burner not operating	External fuse has tripped(1	▸ Check fuse.
	Heating switch is set to Off	▸ Switch on heating switch.
	Temperature limiter or pressure limiter on heat exchanger has triggered(1	▸ Reset temperature limiter or pressure limiter on heat exchanger.
	Low water safety interlock on heat exchanger has triggered(1	▸ Top up water. ▸ Reset low water safety interlock on heat exchanger.
	Temperature regulator or pressure regulator on heat exchanger has been set incorrectly	▸ Adjust temperature regulator or pressure regulator on heat exchanger.
	Boiler or heating circuit control is not functioning or has not been set correctly	▸ Check function and setting of boiler or heating circuit control.

(1 Notify your heating contractor or Weishaupt Customer Service if the problem occurs repeatedly.

10.1.2 Illuminated push button red

A burner fault has occurred. The burner is in lockout. Prior to resetting, the error code can be called up and used to evaluate the cause of the fault.

Read error codes

Only 5 seconds after a fault occurred can it be analysed and read.

- ▶ Press illuminated push button for 5 seconds.
- ✓ Illuminated push button briefly lights up orange.
- ✓ Illuminated push button flashes red.
- ▶ Count the flashing signals between the flashing pauses and note down.
- ▶ Rectify cause of fault, see table.

Reset

WARNING

Danger resulting from incorrect fault repair
Incorrect fault repair can cause damage to the equipment and injure personnel.
- ▶ Do not carry out more than 2 lockout resets successively.
- ▶ Faults must be rectified by qualified personnel.

- ▶ Press illuminated push button for 1 second.
- ✓ Red signal extinguishes.
- ✓ Burner has been reset.

Error codes with lockout

Faults must only be rectified by qualified personnel:

Fault codes	Fault	Cause	Rectification
Flashing 2 times No flame, end of safety time	No ignition	Ignition electrode set incorrectly	▶ Set ignition electrode [ch. 9.5]
		Ignition electrode dirty or wet	▶ Clean ignition electrode
		Ceramic insulator defective	▶ Replace ignition electrode.
		Ignition cable defective	▶ Replace ignition cable
		Ignition unit defective	▶ Replace ignition unit
	Double gas valve does not open	Cable defective	▶ Check cable, if necessary replace
		Coil defective	▶ Replace coil [ch. 9.13]
	Combustion manager does not detect a flame signal	No ionisation current present or insufficient	▶ Measure ionisation current [ch. 7.1.1] ▶ Set ionisation electrode [ch. 9.5] ▶ Check contact resistance (terminal, plug) ▶ Correct burner setting ▶ With circuits that are not connected to the earthing conductor (e. g. control transformer), connect the neutral conductor with the building's earthing conductor.
		Ionisation electrode worn	▶ Replace ionisation electrode
		Ionisation cable defective	▶ Replace cable

10 Troubleshooting

Faults must only be rectified by qualified personnel:

Fault codes	Fault	Cause	Rectification
Flashing 3 times Air pressure switch fault	Air pressure switch does not react	Hoses not attached tightly	▶ Check hoses on air pressure switch
		Air pressure switch set incorrectly	▶ Set air pressure switch [ch. 7.3.2]
		Cable defective	▶ Check cable, if necessary replace
		Air pressure switch defective	▶ Check air pressure switch, if necessary replace
	Burner motor does not run	Capacitor defective	▶ Replace capacitor
		Cable defective	▶ Check cable, if necessary replace
		Burner motor defective	▶ Check burner motor, if necessary replace
Flashing 4 times Flame simulation/ extraneous light	Flame signal prior to or after operation	Ionisation current present	Extraneous light detection from 0.8 µA ▶ Find and eliminate perturbation
		Ionisation electrode defective	▶ Check the ionisation electrode, replace if necessary
Flashing 6 times Actuator fault	Actuator does not reach target position within 10 seconds	Actuator plug unplugged	▶ Plug in actuator plug
		Actuator defective	▶ Check actuator, replace if necessary
		Setting of limit switches incorrect	▶ Check position of limit switches
		Gas valve / air damper blocked	▶ Check freedom of movement of gas valve and air damper
Flashing 7 times Flame failure during operation	Flame signal insufficient	Burner setting incorrect	▶ Check burner setting ▶ Check flame signal
		Ionisation electrode soiled	▶ Clean ionisation electrode
		Ionisation electrode set incorrectly	▶ Set ionisation electrode [ch. 9.5]
		Ionisation electrode defective	▶ Check the ionisation electrode, replace if necessary
Flashing 8 times Gas pressure switch fault	Gas pressure switch does not react	Gas pressure switch set incorrectly	▶ Set gas pressure switch [ch. 7.3.1]
		Gas pressure switch defective	▶ Check gas pressure switch, if necessary replace
Flashing 10 times Combustion manager fault	Burner does not start	Parameters have been changed	▶ Reset burner [ch. 10.1.2]
		Combustion manager defective	▶ Reset burner [ch. 10.1.2], if fault reoccurs replace combustion manager

Faults must only be rectified by qualified personnel:

Fault codes	Fault	Cause	Rectification
Flashing 12 times Valve proving fault First test phase	Valve 1 leaking	Gas valve train leaking	▶ Check soundness of gas valve train [ch. 7.1.3]
		Gas pressure switch set incorrectly	▶ Set gas pressure switch
		Gas pressure switch defective	▶ Check gas pressure switch, if necessary replace
		Multifunction assembly defective	▶ Replace multifunction assembly
Flashing 13 times Valve proving fault Second test phase	Valve 2 leaking	Gas valve train leaking	▶ Check soundness of gas valve train [ch. 7.1.3]
		Gas pressure switch set incorrectly	▶ Set gas pressure switch [ch. 7.3.1]
		Gas pressure switch defective	▶ Check gas pressure switch, if necessary replace
		Multifunction assembly defective	▶ Replace multifunction assembly
Flashing 15 times	Manual shutdown	Manual lockout ABE	▶ Reset burner

10.1.3 Illuminated push button flashes

An irregularity is present. The burner does not go to lockout. Once the fault has been rectified, the error code ceases.

Error codes without lockout

Faults must only be rectified by qualified personnel:

Fault codes	Cause	Rectification
flashing green/red	Flame signal at heat demand	▸ Find and eliminate perturbation
Flashing red/orange with pause	Excess voltage	▸ Check voltage supply
Flashing orange/red	Low voltage	▸ Check voltage supply
	Internal unit fuse (F7) faulty	▸ Replace fuse [ch. 9.16]
	Combustion manager fault	▸ Replace combustion manager
Flashing red	Low gas	▸ Check gas connection pressure ▸ Set gas pressure switch [ch. 7.3.1] ▸ Check gas pressure switch
orange, after 5 seconds red	Air pressure switch does not react	▸ Set air pressure switch [ch. 7.3.2] ▸ Check air pressure switch ▸ With ducted air intake air pressure switch, check air supply
Flashing green	Burner operation with weak flame signal	Minimum ionisation current 1.5 µA ▸ Check burner setting
	Ionisation electrode soiled	▸ Clean ionisation electrode
	Ionisation electrode defective	▸ Replace ionisation electrode
Glimmering red	OCI mode activated (not used)	▸ Press illuminated push button for more than 5 seconds ✓ Combustion manager changes to operating mode

10.2 Operating problems

Faults must only be rectified by qualified personnel:

Observation	Cause	Rectification
Poor start behaviour of burner	Mixing pressure too high	▶ Reduce mixing pressure in ignition position
	Ignition electrode set incorrectly	▶ Set ignition electrode [ch. 9.5]
	Mixing head set incorrectly	▶ Set mixing head [ch. 9.4]
	Ignition load set incorrectly	▶ Set ignition load [ch. 7.2]
Combustion pulsating and/or burner booming	Mixing head set incorrectly	▶ Set mixing head [ch. 9.4]
	Incorrect combustion air quantity	▶ Adjust burner
Stability problems	Mixing pressure too high	▶ Decrease mixing pressure

11 Technical documentation

11.1 Wiring diagram

For special version observe wiring diagram supplied.

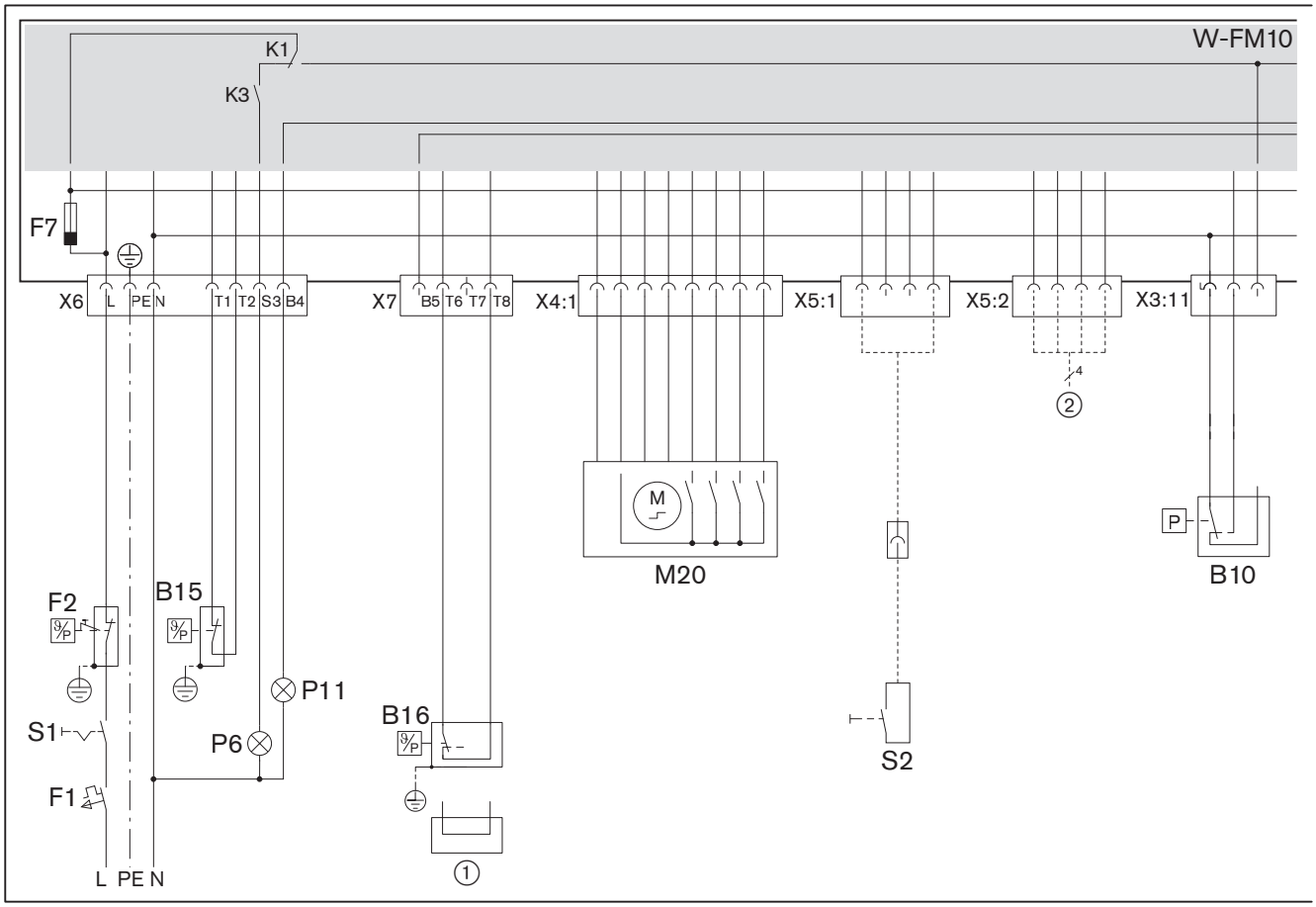

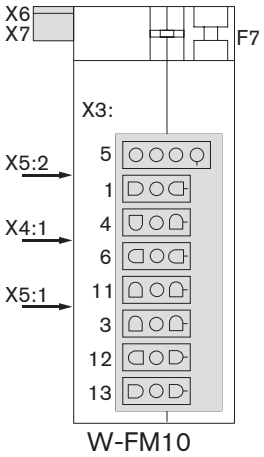

B10	Air pressure switch
B15	Temperature or pressure regulator
B16	Temperature or pressure regulator full load
F1	External fuse (max B16 A)
F2	Temperature or pressure limiter
F7	Internal unit fuse (T6.3H, IEC 127-2/5)
M20	Air damper actuator
P6	Control lamp lockout (optional)
P11	Control lamp operation (optional)
S1	Operating switch
S2	Remote reset (optional)
①	Bridge for single stage operation
②	Bus interface BCI (optional): ▪ The display and operating unit (service package operating unit W-FM05/10) ▪ Interface module OCI410 with software ACS410 ▪ Data protocol converter OCI460 (building management system)

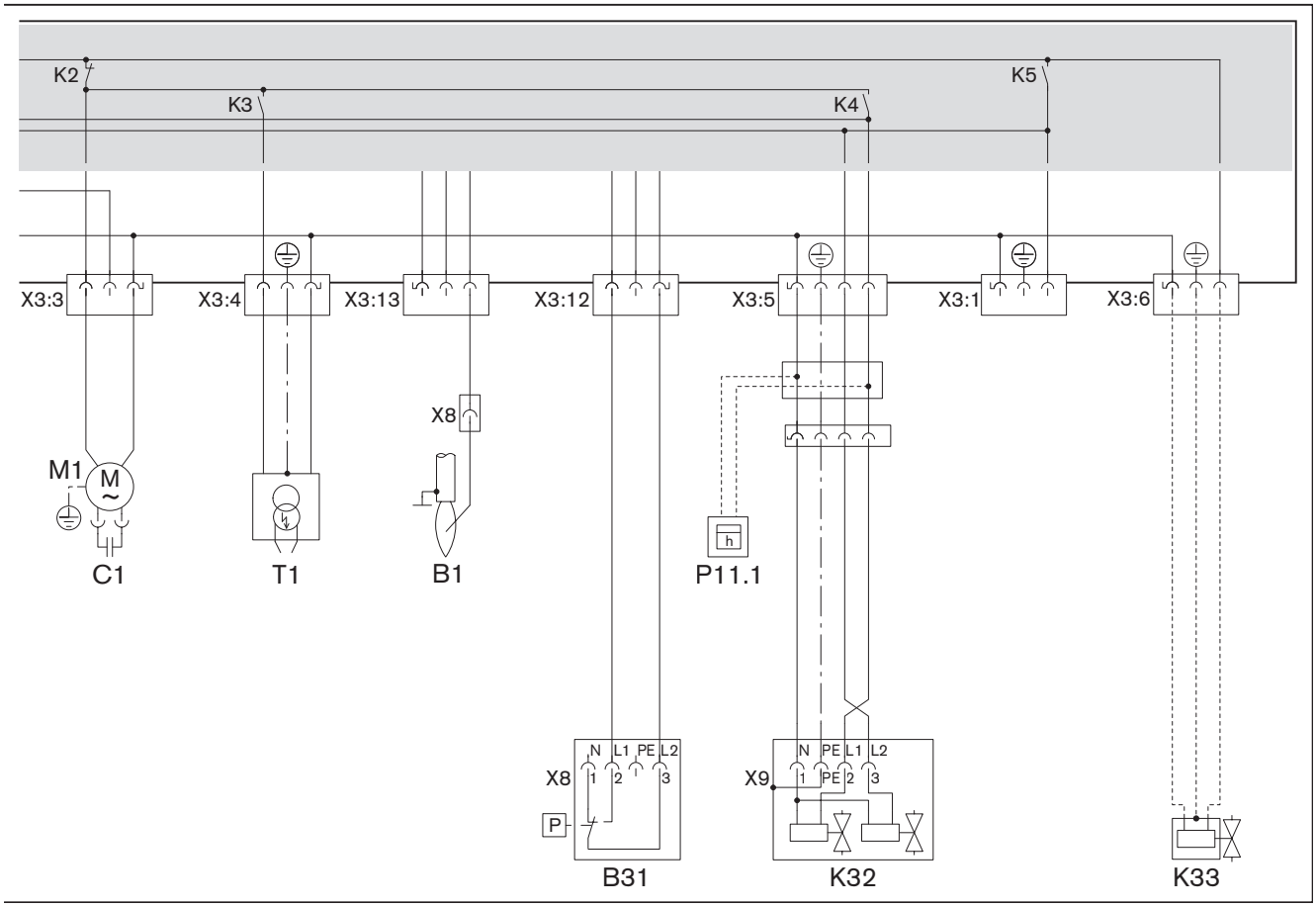

B1	Flame sensor
B31	Low gas pressure switch/valve proving gas pressure switch
C1	Motor capacitor
K32	double gas valve
K33	External valve LPG (optional)
M1	Burner motor
P11.1	Hours counter (optional)
T1	Ignition unit

11.2 Conversion table unit of pressure

Bar	Pascal			
	Pa	**hPa**	**kPa**	**MPa**
0.1 mbar	10	0.1	0.01	0.00001
1 mbar	100	1	0.1	0.0001
10 mbar	1 000	10	1	0.001
100 mbar	10 000	100	10	0.01
1 bar	100 000	1 000	100	0.1
10 bar	1 000 000	10 000	1 000	1

11.3 Appliance categories

Labelling of forced-draught gas and dual fuel burners per EN 676

EN 676, "Forced draught burners for gaseous fuels", is used for the implementation of the basic requirements of the directive (EU) 2016/426.

EN 676 stipulate the following appliance categories for forced draught gas burners under Point 4.4.9:

I2R	for Natural Gas
I3R	for Liquid Petroleum Gas
II2R/3R	for Natural Gas / Liquid Petroleum Gas

The test gases listed under point 5.1.1, table 4 and the minimum test pressures determined and listed under point 5.1.2, table 5 are used to provide the evidence of service performance of the burner during type testing.

As -Weishaupt- gas and dual fuel burners fulfil this requirement completely, the appliance category, as well as the test gases used with the permissible connection pressure range, are listed on the name plate when labelling the burner to point 6.2 . This clearly defines the suitability of the burner for use with second and third family gases.

On the basis of a type test report to ISO 17025 from an accredited test centre, the EU Type Testing Certificate to Directive (EU) 2016/426 also quotes the appliance category, the supply pressure and the country of destination.

EN 437, "Test gases - test pressures - appliance categories", describes the interrelationships and the special national characteristics relating to this subject in detail.

The following tables give an overview of the interrelationships between the R Categories and the nationally used appliance categories with their test gases and connection pressures.

Alternative appliance category to I2R

Country of destination	Appliance category	Test gas	Connection pressure [mbar]
AT (Austria)	I_{2H}	G 20	20
BE (Belgium)	I_{2E+}, I_{2N}, $I_{2E(S)}$, $I_{2E(R)}$	G 20	Pressure range 20⇆25
CH (Switzerland)	I_{2H}	G 20	20
CZ (Czech Republic)	I_{2H}	G 20	20
DE (Germany)	I_{2E}, I_{2N}, I_{2ELL}	G 20, G 25	20
DK (Denmark)	I_{2H}, I_{2N}	G 20	20
EE (Estonia)	I_{2H}	G 20	20
ES (Spain)	I_{2H}, I_{2N}	G 20	20
FI (Finland)	I_{2H}	G 20	20
FR (France)	I_{2E+}, I_{2L}, I_{2H}, I_{2N}, I_{2Esi}, I_{2Er}	G 20, G 25	Pressure range 20⇆25
GB (United Kingdom)	I_{2H}	G 20	20
GR (Greece)	I_{2H}, I_{2N}	G 20	20
HR (Croatia)	I_{2H}	G 20	20
HU (Hungary)	I_{2H}, I_{2HS}	G 20, G 25.1	20
IE (Ireland)	I_{2H}	G 20	20
IT (Italy)	I_{2H}, I_{2HM}	G 20, G 230	20
LT (Lithuania)	I_{2H}	G 20	20
LV (Latvia)	I_{2H}	G 20	20
NL (Netherlands)	I_{2EK}, I_{2N}	G 25.3, G 20	20
NO (Norway)	I_{2H}	G 20	20
PL (Poland)	I_{2E}, I_{2N}, I_{2ELw}, I_{2ELs}, I_{2ELn}, I_{2ELwLs}, $I_{2ELwLsLn}$	G 20, G 27, G 2.300, G 2.350	20
PT (Portugal)	I_{2H}, I_{2N}	G 20	20
RO (Romania)	I_{2H}, I_{2L}, I_{2E}	G 20	20 / 25
SE (Sweden)	I_{2H}	G 20	20
SI (Slovenia)	I_{2H}, I_{2N}	G 20	20
SK (Slovakia)	I_{2H}	G 20	20
TR (Turkey)	I_{2H}	G 20	20

11 Technical documentation

Alternative appliance category to I3R

Country of destination	Appliance category	Test gas	Connection pressure [mbar]
AT (Austria)	$I_{3B/P}$, I_{3P}	G 30, G 31	30 / 50
BE (Belgium)	I_{3+}, I_{3P}, I_{3B}, $I_{3B/P}$	G 30, G 31	Pressure range 28-30⇆37 50
CH (Switzerland)	$I_{3B/P}$, I_{3+}, I_{3P}	G 30, G 31	Pressure range 28-30⇆37 50
CY (Cyprus)	$I_{3B/P}$, I_{3+}, I_{3B}	G 30, G 31	Pressure range 28-30⇆37 Pressure range 50⇆67
CZ (Czech Republic)	$I_{3B/P}$, I_{3+}, I_{3P}	G 30, G 31	Pressure range 28-30⇆37 50
DE (Germany)	$I_{3B/P}$, I_{3P}	G 30, G 31	30/50
DK (Denmark)	$I_{3B/P}$	G 30, G 31	30
EE (Estonia)	$I_{3B/P}$	G 30, G 31	30
ES (Spain)	I_{3+}, I_{3P}, I_{3B}	G 30, G 31	Pressure range 28-30⇆37 50
FI (Finland)	$I_{3B/P}$	G 30, G 31	28-30
FR (France)	I_{3+}, I_{3P}, I_{3B}, $I_{3B/P}$	G 30, G 31	Pressure range 28-30⇆37 50 Pressure range 112⇆148
GB (United Kingdom)	I_{3+}, I_{3P}, I_{3B}, $I_{3B/P}$	G 30, G 31	Pressure range 28-30⇆37 50
GR (Greece)	$I_{3B/P}$, I_{3+}, I_{3P}, I_{3B}	G 30, G 31	Pressure range 28-30⇆37 50
HR (Croatia)	$I_{3B/P}$, I_{3P}	G 30, G 31	30 / 37
HU (Hungary)	$I_{3B/P}$, I_{3P}, I_{3B}	G 30, G 31	30
IE (Ireland)	I_{3+}, I_{3P}, I_{3B}	G 30, G 31	Pressure range 28-30⇆37
IT (Italy)	$I_{3B/P}$, I_{3+}, I_{3P}	G 30, G 31	Pressure range 28-30⇆37
LT (Lithuania)	$I_{3B/P}$, I_{3+}, I_{3P}	G 30, G 31	Pressure range 28-30⇆37
NL (Netherlands)	$I_{3B/P}$, I_{3P}	G 30, G 31	30 / 37 / 50
NO (Norway)	$I_{3B/P}$	G 30, G 31	30
PL (Poland)	$I_{3B/P}$, I_{3P}, $I_{3P(B/P)}$	G 30, G 31	30 / 37
PT (Portugal)	I_{3+}, I_{3P}, I_{3B}	G 30, G 31	Pressure range 28-30⇆37 Pressure range 50⇆67
RO (Romania)	$I_{3B/P}$, I_{3P}	G 30, G 31	30
SE (Sweden)	$I_{3B/P}$	G 30, G 31	30
SI (Slovenia)	$I_{3B/P}$, I_{3+}, I_{3P}	G 30, G 31	Pressure range 28-30⇆37
TR (Turkey)	$I_{3B/P}$, I_{3+}	G 30, G 31	Pressure range 28-30⇆37

Alternative appliance category to II2R/3R

Country of destination	Appliance category	Test gas	Connection pressure [mbar]	Test gas	Connection pressure [mbar]
AT (Austria)	$II_{2H3B/P}$, II_{2H3P}	G 20	20	G 30, G 31	30 / 50
BE (Belgium)	II_{2E+3P}, II_{2E+3+}, II_{2E+3B}, $II_{2E(S)3P}$, $II_{2E(R)3P}$	G 20	Pressure range 20⇆25	G 30, G 31	Pressure range 28-30⇆37 50
CH (Switzerland)	$II_{2H3B/P}$, II_{2H3+}, II_{2H3P}	G 20	20	G 30, G 31	Pressure range 28-30⇆37 50
CY (Cyprus)	$II_{2H3B/P}$, II_{2H3+}	G 20	20	G 30, G 31	Pressure range 28-30⇆37 Pressure range 50⇆67
CZ (Czech Republic)	$II_{2H3B/P}$, II_{2H3+}, II_{2H3P}	G 20	20	G 30, G 31	Pressure range 50⇆67
DE (Germany)	$II_{2E3B/P}$, $II_{2ELL3B/P}$, II_{2ELL3P}, II_{2E3P}	G 20, G 25	20	G 30, G 31	30 / 50
DK (Denmark)	II_{1a2H}, $II_{2H3B/P}$	G 20	20	G 30, G 31	30
EE (Estonia)	$II_{2H3B/P}$	G 20	20	G 30	30
ES (Spain)	II_{2H3P}, II_{2H3+}	G 20	20	G 30, G 31	Pressure range 28-30⇆37 50
FI (Finland)	$II_{2H3B/P}$	G 20	20	G 30, G 31	28-30
FR (France)	II_{2E+3+}, II_{2E+3P}, $II_{2E+3B/P}$, II_{2L3P}, II_{2H3P}, II_{2Esi3+}, II_{2Er3+}, II_{2Esi3P}, II_{2Er3P}	G 20, G 25	Pressure range 20⇆25	G 30, G 31	Pressure range 50⇆67 Pressure range 112⇆148
GB (United Kingdom)	II_{2H3+}, II_{2H3P}	G 20	20	G 30, G 31	Pressure range 28-30⇆37 50
GR (Greece)	$II_{2H3B/P}$, II_{2H3+}, II_{2H3P}	G 20	20	G 30, G 31	Pressure range 28-30⇆37 50
HR (Croatia)	$II_{2H3B/P}$, II_{2H3P}	G 20	20	G 30, G 31	30 / 37
IE (Ireland)	II_{2H3+}, II_{2H3P}	G 20	20	G 30, G 31	Pressure range 28-30⇆37
IT (Italy)	II_{1a2H}, $II_{2H3B/P}$, II_{2H3+}, II_{2H3P}, II_{2HM3+}, $II_{2HM3B/P}$, II_{2HM3P}	G 20, G 230	20	G 30, G 31	Pressure range 28-30⇆37
LT (Lithuania)	$II_{2H3B/P}$, II_{2H3+}, II_{2H3P}	G 20	20	G 30, G 31	Pressure range 28-30⇆37
NL (The Netherlands)	$II_{2EK3B/P}$	G 25	20	G 31	30 / 37 / 50
NO (Norway)	$II_{2H3B/P}$	G 20	20	G 30, G 31	30
PL (Poland)	$II_{2E3B/P}$, II_{2E3P},$II_{2E3P(B/P)}$, $II_{2ELs3B/P}$, II_{2ELs3P}, $II_{2HM3B/P}$, $II_{2ELwLs3P}$, $II_{2ELwLs3P(B/P)}$, $II_{2ELwLsLn3P(B/P)}$	G 20, G 27, G 2.300, G 2.350	20	G 30, G 31	30 / 37
PT (Portugal)	II_{2H3+}, II_{2H3P}	G 20	20	G 30, G 31	Pressure range 28-30⇆37 Pressure range 50⇆67

11 Technical documentation

Country of destination	Appliance category	Test gas	Connection pressure [mbar]	Test gas	Connection pressure [mbar]
RO (Romania)	$II_{2H3B/P}$, II_{2H3P}, II_{2L3P}, $II_{2E3B/P}$, $II_{2L3B/P}$	G 20	20 / 25	G 30, G 31	30
SE (Sweden)	II_{1a2H}, $II_{2H3B/P}$	G 20	20	G 30, G 31	30
SI (Slovenia)	$II_{2H3B/P}$, II_{2H3+}, II_{2H3P}	G 20	20	G 30, G 31	Pressure range 28-30⇆37
SK (Slovakia)	$II_{2H3B/P}$, II_{2H3+}, II_{2H3P}	G 20	20	G 30, G 31	Pressure range 28-30⇆37 50
TR (Turkey)	$II_{2H3B/P}$, II_{2H3+}	G 20	20	G 30, G 31	Pressure range 30⇆37

12 Project planning

12.1 Continuous running fan or post-purge



WARNING

Fire hazard due to failure of the combustion air fan
Failure of the combustion air fan (e.g. due to a power failure or defective motor) during operation with continuous running fan or increased post-purge may result in back radiation or hot flue gases flowing back into the burner housing. This could cause a fire.

If fail-safe continuous ventilation or post-purge is required, take appropriate measures, such as:

- ▶ installing compressed air flushing on site with:
  - sufficiently large compressed air tank
  - normally open compressed air valve

13 Spares

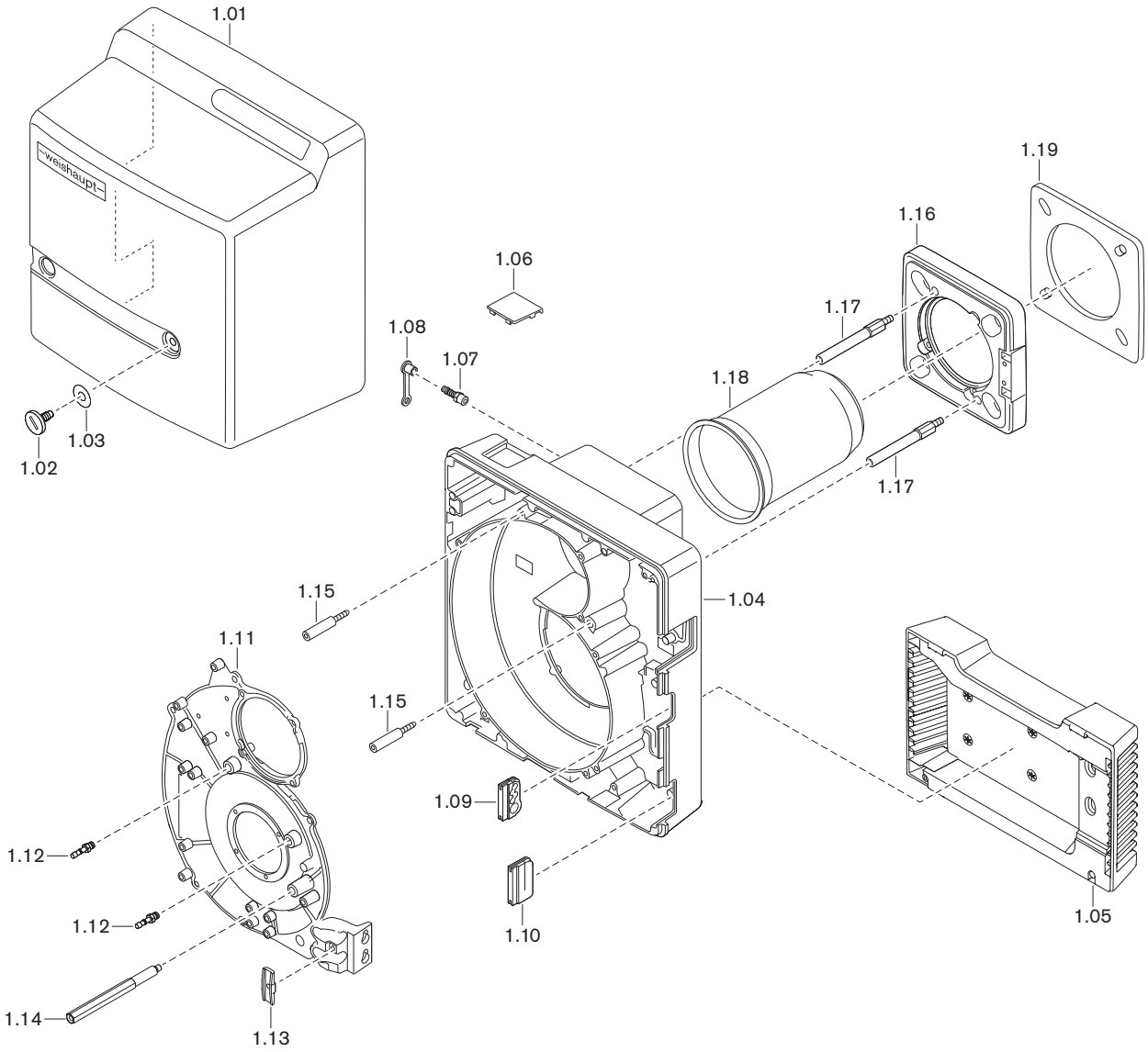
1.01
1.02
1.03
1.04
1.05
1.06
1.07
1.08
1.09
1.10
1.11
1.12
1.12
1.13
1.14
1.15
1.15
1.16
1.17
1.17
1.18
1.19

13 Spares

Pos.	Description	Order No.
1.01	Cover complete	241 110 01 112
1.02	Screw M8 x 15	142 013 01 157
1.03	Washer 7 x 18	430 016
1.04	Burner housing	241 110 01 307
1.05	Intake housing complete	241 110 01 082
	– Screw 4 x 30 Torx-Plus	409 325
1.06	View port on hours counter cover	241 210 01 197
1.07	Treaded socket R⅛ GES6	453 017
1.08	Protective cap DN 6 SELF 50/2 CF	232 300 01 047
1.09	Grommet for connection cable	241 200 01 247
1.10	Grommet	241 400 01 177
1.11	Housing cover	241 110 01 317
1.12	Treaded socket R⅛ GES4	453 004
1.13	Bracket for cable	241 400 01 367
1.14	Stay bolt cover	241 210 01 207
1.15	Screw M6 burner housing	241 110 01 297
1.16	Burner flange	241 110 01 357
	– Screw ISO 4762 M8 x 30- 8.8	402 517
	– Washer 8.4 DIN 433	430 504
1.17	Stay bolt for burner flange	241 050 01 187
1.18	Flame tube WG10-D	
	– Standard	232 110 14 122
	– extended by 100 mm*	230 110 14 132
	– extended by 200 mm*	230 110 14 142
	– extended by 300 mm*	230 110 14 152
1.19	Flange gasket	241 110 01 107

* Only in conjunction with combustion head extension.

13 Spares

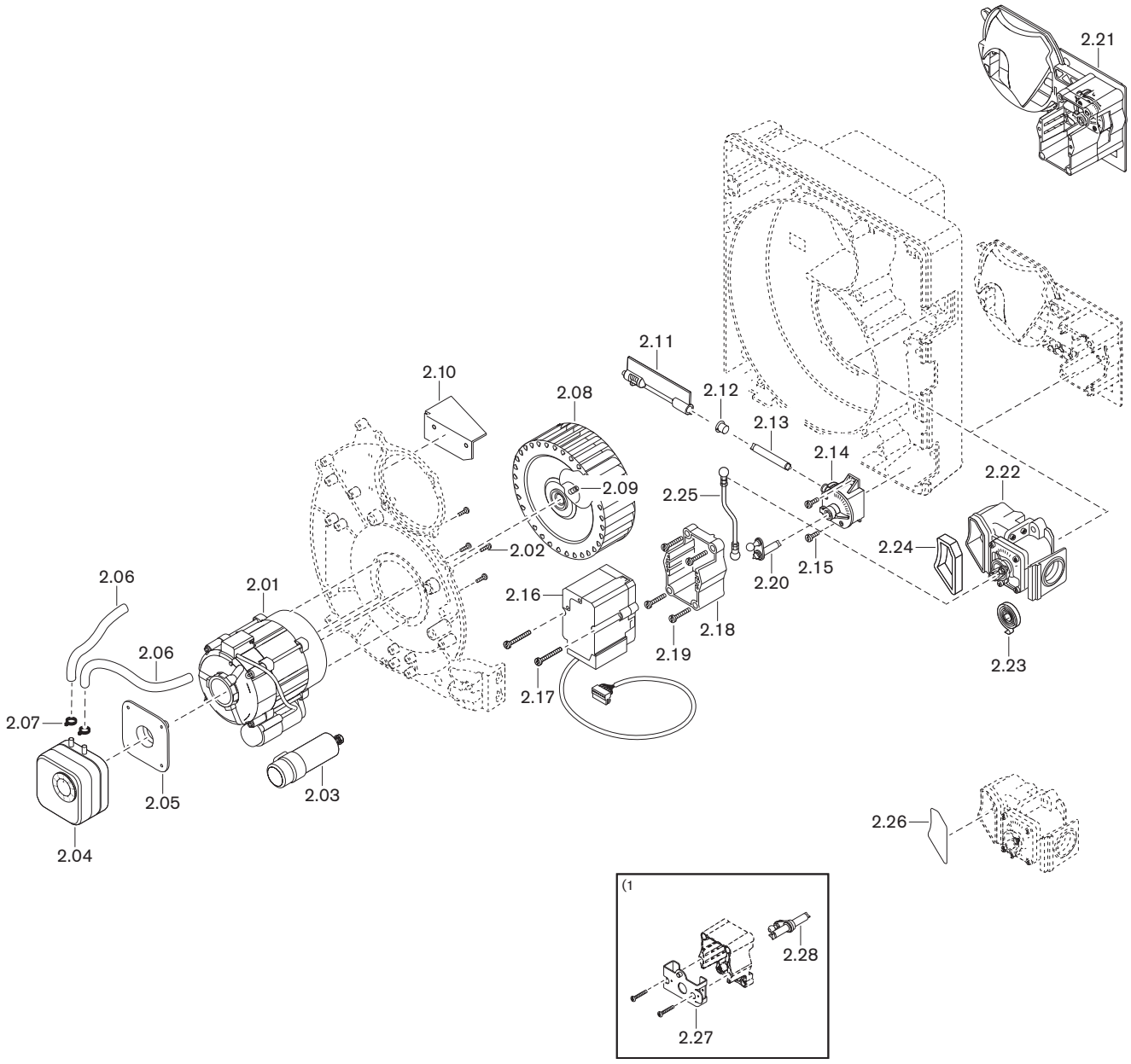
2.21
2.11
2.10
2.08
2.12
2.13
2.14
2.09
2.25
2.22
2.24
2.02
2.15
2.20
2.06
2.01
2.16
2.18
2.06
2.19
2.23
2.07
2.17
2.05
2.03
2.04
2.26
(1
2.28
2.27

13 Spares

Pos.	Description	Order No.
2.01	Motor ECK03/H-2/1 230V 50Hz	652 113
2.02	Screw M4 x 10	409 323
2.03	Capacitor set	713 472
2.04	Pressure switch LGW 10 A2 1 - 10 mbar	691 370
2.05	Connection flange for LGW	605 243
2.06	Hose 4.0 x 1.75 190 mm	232 050 24 057
2.07	Hose clamp 7.5	790 218
2.08	Fan wheel TLR 152 x 47 -L S1 50Hz	241 110 08 042
2.09	Grub screw M6 x 8 w. an. cutter	420 549
2.10	Air guide	232 110 01 017
2.11	Air damper complete	241 110 02 102
2.12	Bearing for air damper shaft	241 110 02 107
2.13	Shaft air damper - angle drive	241 210 02 057
2.14	Angle drive	241 110 02 062
2.15	Screw 4 x 12 Torx-Plus Remform	409 320
2.16	Actuator STD 4.5, 24 V	651 102
2.17	Screw 4 x 35 Combi-Torx-Plus Remform	409 355
2.18	Frame for actuator	241 210 02 037
2.19	Screw 4 x 30 Torx-Plus Delta PT	409 325
2.20	Lever complete	232 210 02 012
2.21	Air regulator spring 2	241 110 02 092
2.22	Gas butterfly valve	
	– Natural Gas	232 110 25 010
	– Liquid Petroleum Gas	233 110 25 010
2.23	Spring 2	241 400 02 167
2.24	Seal connection channel	232 110 25 087
2.25	Threaded rod complete	232 110 25 012
2.26	Blanking plate valve proving	232 210 26 172
2.27	Adapter complete actuator rotated 180°[1]	230 110 02 012
2.28	Lever complete actuator rotated 180°[1]	230 110 02 022

[1] Only if rotated 180°.

13 Spares

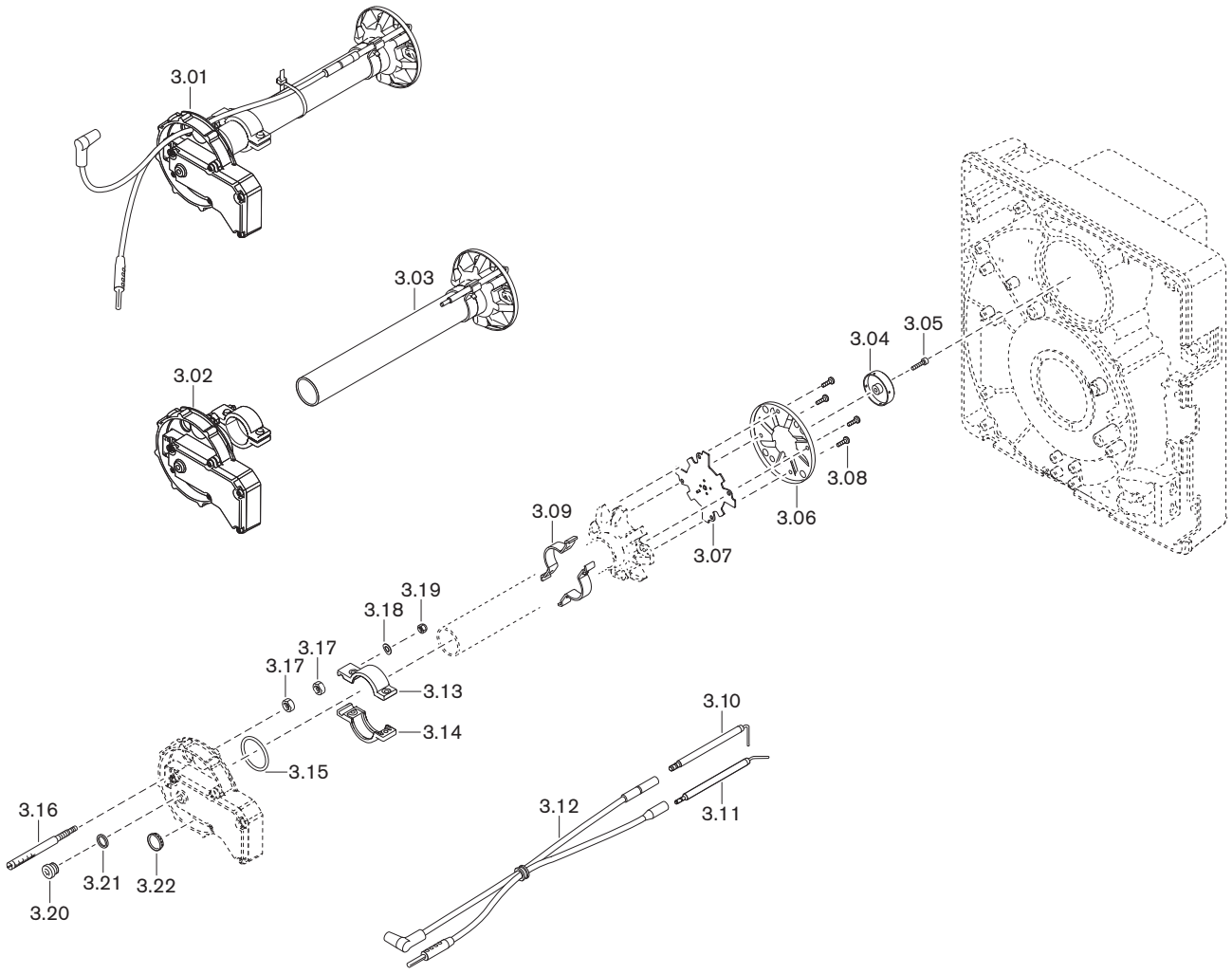
3.01
3.03
3.02
3.04
3.05
3.08
3.06
3.09
3.07
3.19
3.18
3.17
3.17
3.13
3.14
3.15
3.10
3.12
3.11
3.16
3.21
3.22
3.20

13 Spares

Pos.	Description	Order No.
3.01	Mixing head WG10N/... complete (Natural Gas)	
	– Standard	232 110 14 052
	– extended by 100 mm*	230 110 14 012
	– extended by 200 mm*	230 110 14 032
	– extended by 300 mm*	230 110 14 052
	Mixing head WG10F/... complete (LPG)	
	– Standard	233 110 14 012
	– extended by 100 mm*	230 110 14 072
	– extended by 200 mm*	230 110 14 092
	– extended by 300 mm*	230 110 14 112
3.02	Lock housing complete	232 110 14 022
3.03	Mixing tube WG10N/... complete (Natural Gas)	
	Ø internal 29 mm	
	– Standard	232 110 14 082
	– extended by 100 mm*	230 110 14 022
	– extended by 200 mm*	230 110 14 042
	– extended by 300 mm*	230 110 14 062
	Mixing tube WG10F/... complete (LPG)	
	Ø internal 12 mm	
	– Standard	233 110 14 022
	– extended by 100 mm*	230 110 14 082
	– extended by 200 mm*	230 110 14 102
	– extended by 300 mm*	230 110 14 122
3.04	Nozzle element	232 200 14 467
3.05	Screw M4 x 16 Torx-Plus 20IP	409 224
3.06	Diffuser 36 x 90	232 200 14 407
3.07	Nozzle insert	232 110 14 077
3.08	Screw M4 x 8 Torx-Plus 20IP	409 235
3.09	Bracket for electrodes	232 200 14 437
3.10	Ignition electrode isolator 6 x 80	232 200 14 217
3.11	Sensor electrode	232 100 14 207
3.12	Ignition and sensor cable	
	– 380 mm (Standard)	232 110 11 032
	– 480mm (for 100 mm extension)*	230 110 11 082
	– 600mm (for 200 mm extension)*	232 310 11 042
	– 640mm (for 300 mm extension)*	230 110 11 102
3.13	Carrier	232 200 14 037
3.14	Carrier	232 200 14 047
3.15	O ring 32 x 3 NBR70 ISO 3601	445 095
3.16	Adjusting screw	232 210 14 047
3.17	Hexagonal nut M8 left ISO 4032 -8	411 413
3.18	Spring washer A5 DIN 137	431 613
3.19	Hexagonal nut M5 DIN 985	411 203
3.20	Screw G⅛ A DIN 908	409 004
3.21	Sealing ring 10 x 13.5 x 1.5 DIN 7603	441 033
3.22	View port glass	241 400 01 377

* Only in conjunction with combustion head extension.

13 Spares

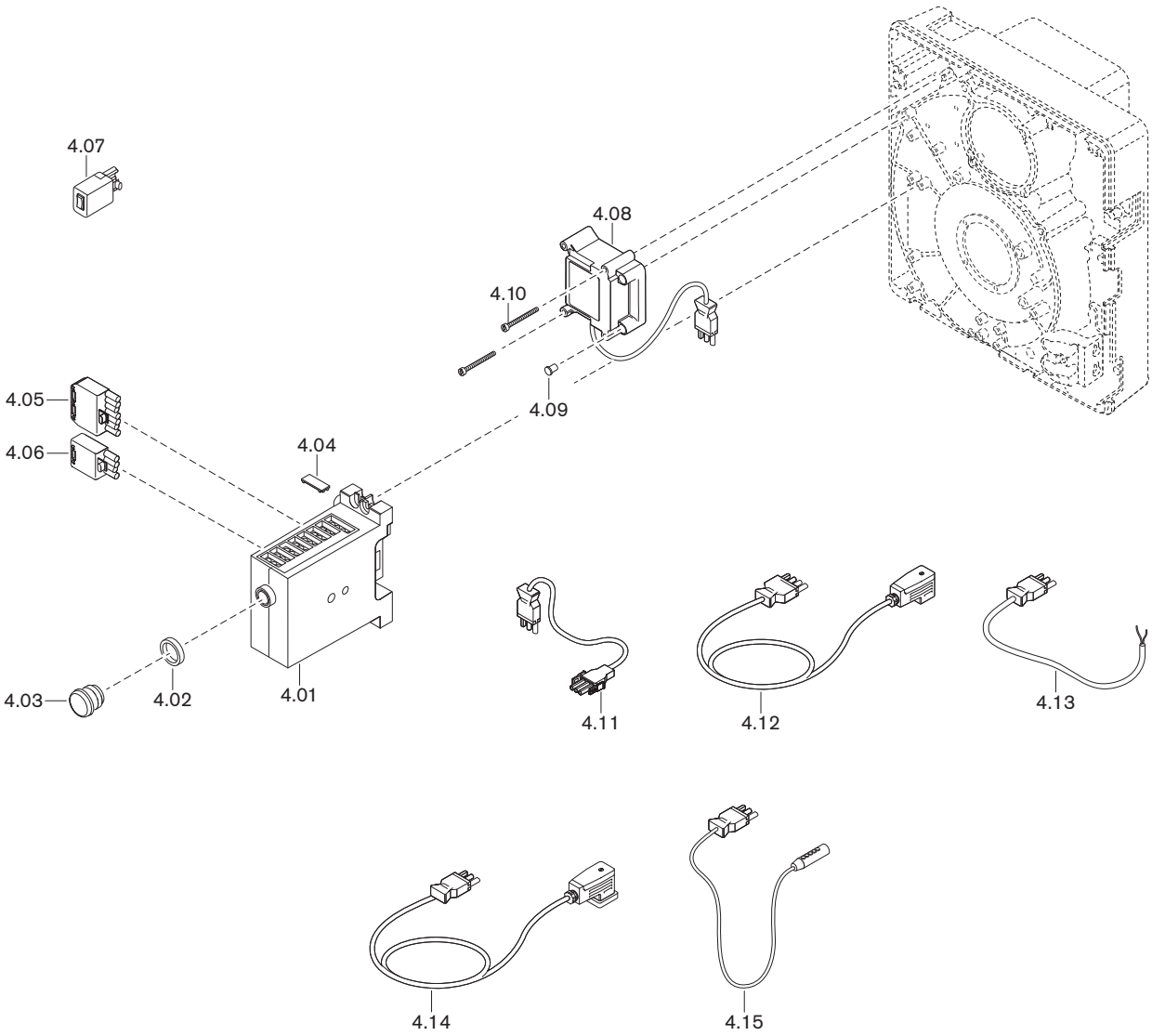

13 Spares

Pos.	Description	Order No.
4.01	Combustion manager W-FM10 230 V / 50/60 Hz	600 393
	– Micro fuse T6.3H, IEC 127-2/5	483 011 22 457
4.02	Adapter ring 22 x 4 for extension	600 358
4.03	Reset button extension AGK20.19	600 357
4.04	Cover clip AGK63	600 312
4.05	Plug unit ST18/7	716 549
4.06	Plug unit ST18/4	716 546
4.07	Plug-in switch ST18/4 version Z	130 103 15 012
4.08	Ignition unit type W-ZG01V 230V 100W	603 229
4.09	Closing plug for ignition unit	603 224
4.10	Screw M4 x 42 Combi-Torx-Plus 20IP	409 260
4.11	Plug cable No. 3 fan motor	241 050 12 062
4.12	Plug cable No. 5 W-MF	232 110 12 052
4.13	Plug cable No. 11 air pressure switch	232 110 12 022
4.14	Plug cable No.12 gas pressure switch	232 050 12 022
4.15	Ionisation cable No. 13	232 310 12 012

13 Spares

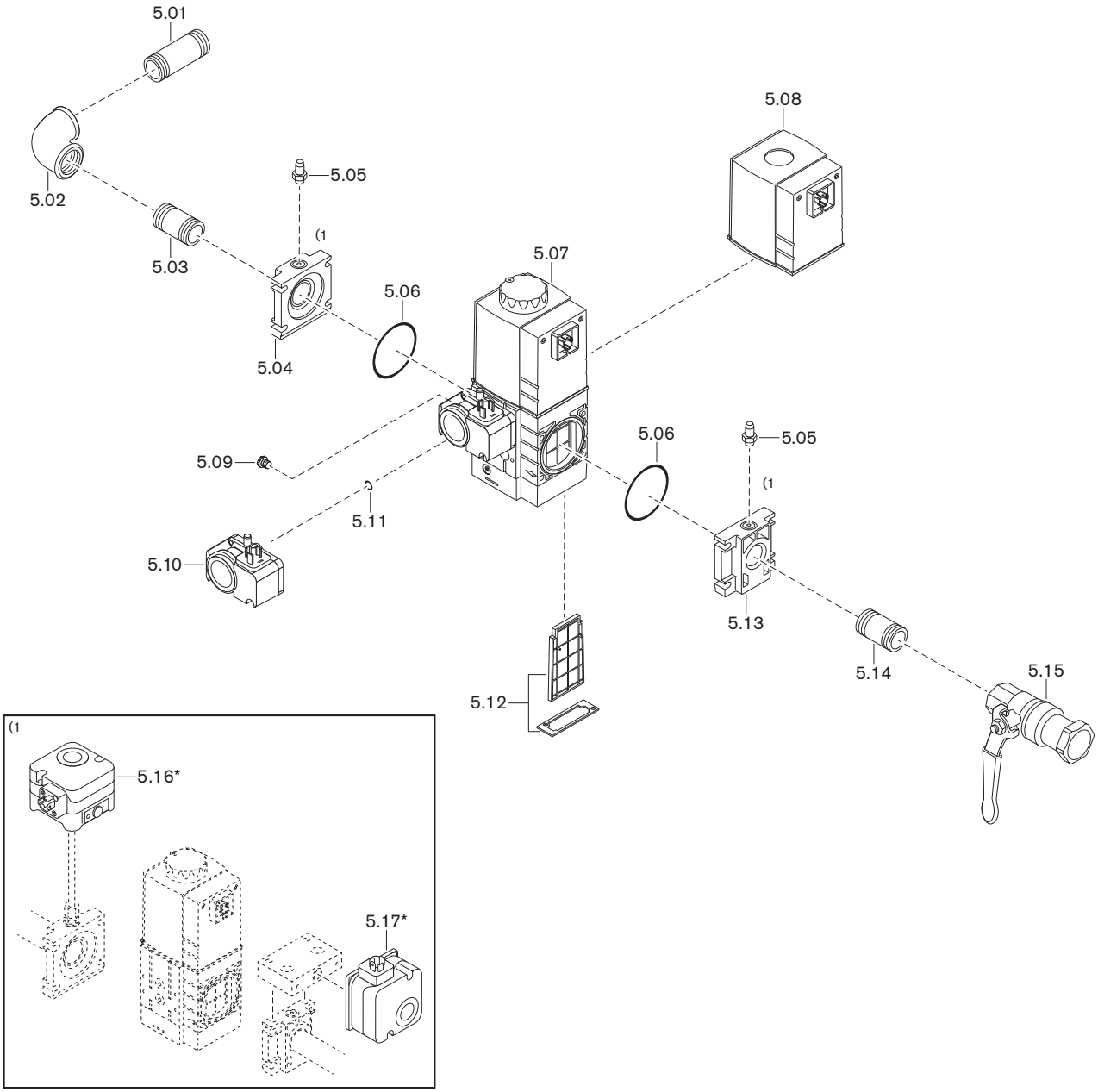
5.01
5.02
5.03
5.04
5.05
5.06
5.07
5.08
5.09
5.10
5.11
5.12
5.13
5.14
5.15
5.16*
5.17*

13 Spares

Pos.	Description	Order No.
5.01	Double nipple R¾ x 80	139 000 26 787
5.02	Elbow A1-¾-Zn-A	453 143
5.03	Double nipple R¾ x 50	139 000 26 727
5.04	Flange W-MF 507 Rp¾	605 227
5.05	Pressure test nipple G⅛ A	453 001
5.06	O ring 57 x 3 W-MF 507	445 519
5.07	Multifunction assembly W-MF SE 507 S22, 230 V with gas pressure switch	605 320
5.08	Solenoid coil W-MF 507 No. 032P, 230 V	605 255
5.09	Breather plug with filter element G⅛	605 302
5.10	Pressure switch GW 50 A5/1 5 … 50 mbar with screws and O ring	691 378
5.11	O ring 10.5 x 2.25	445 512
5.12	Filter insert with seal W-MF 507	605 253
5.13	Flange W-MF 507	
	– Rp¾	605 227
	– Rp1	605 233
5.14	Double nipple	
	– R¾ x 50	139 000 26 727
	– R1 x 50	139 000 26 737
5.15	Isolating valve with TAE	
	– 998 N G¾ CE-TAS for Gas PN1	454 596
	– 998 N G1 CE-TAS for Gas PN 1	454 597
	Isolating valve without TAE	
	– 984 D Rp¾ PN 40/MOP5	454 660
	– 984 D Rp1 PN 40/MOP5	454 661
5.16	Pressure switch ÜB 50 A4 5 - 50 mbar*	691 360
5.17	Pressure switch NB 50 A2 5 - 50 mbar*	691 361

* Only in conjunction with high gas pressure switch and low gas pressure switch.

14 Notes

A

Actuator ... 61
Air damper ... 11, 40, 61, 62, 64
Air number ... 49
Air pressure ... 50
Air pressure switch ... 11, 47
Air regulator ... 64
Ambient conditions ... 16
Ammeter ... 32
Angle drive ... 62
Aperture ... 21, 22, 24
Appliance category ... 76
Approval data ... 16

B

Ball valve ... 12, 20
Bar ... 76
Basic setting ... 56
Booming ... 73
Breather plug ... 65
Burner motor ... 13, 60

C

Calorific value ... 38
Capacity graph ... 18
CO content ... 49
Coil ... 65
Combustion air ... 7
Combustion analysis ... 49
Combustion chamber pressure ... 18
Combustion head extension ... 21
Combustion heat rating ... 18, 40
Combustion limit ... 49
Combustion Manager ... 13, 30
Commissioning ... 31
Condensate ... 9
Connection pressure ... 25, 33, 38
Consumption ... 16
Conversion factor ... 50
Conversion table ... 76

D

Design lifespan ... 8, 52
Diffuser ... 11, 40, 41
Dimensions ... 19
Display ... 30
Disposal ... 9
double gas valve ... 12, 25
Drilling dimension drawing ... 21
Ducted air intake ... 7, 18

E

Electrical connection ... 29
Electrical data ... 16
Electrode ... 57
electrostatic discharge ... 8
Emission ... 17
Emission class ... 17
ESD protective measures ... 8
Excess air ... 49

F

Fan motor ... 60
Fan pressure ... 32
Fan wheel ... 11, 59
Fault ... 68, 69, 72, 73
Fault codes ... 69, 72
Fault memory ... 69
Filter ... 12, 66
Filter insert ... 66
Flame signal ... 13, 32
Flame tube ... 21
Flashing codes ... 69, 72
Flowchart ... 14
Flue gas losses ... 49
Flue gas measurement ... 49
Flue gas temperature ... 49
Fuel ... 16
Fuel release ... 14
Full load ... 43
Fusing ... 16, 67

G

Gas butterfly valve ... 12
Gas connection pressure ... 25, 33
Gas family ... 76
Gas filter ... 12, 66
Gas isolation valve ... 12, 20
Gas pressure switch ... 12, 27
Gas setting pressure ... 38
Gas supply ... 25
Gas temperature ... 50
Gas throughput ... 50
Gas valve train ... 22, 26
Guarantee ... 6

H

H2 ... 16
Heat exchanger ... 21
High gas pressure switch ... 13, 46
Hours counter ... 75
Housing cover ... 58
Humidity ... 16
Hydrogen ... 16, 43, 49

I

Idle time ... 51
Ignition ... 14
Ignition electrode ... 57
Ignition unit ... 13
Illuminated push button ... 30, 68, 69
Indicating bolt ... 41
Initialisation time ... 15
Installation ... 21, 22
Installation elevation ... 16, 18
Installation location ... 7, 21
Installation position ... 25
Intake housing ... 64

15 Key word index

Internal unit fuse 67
Ionisation current 32
Ionisation electrode 13, 57

L

Liability 6
Lifespan 8, 52
Limit switch 41
Lockout 68, 69, 72
Low gas pressure switch/valve proving gas pressure switch 12, 46

M

Mains voltage 16
Maintenance position 58
mbar 76
Measuring device 32
Mechanical noises 73
Mixing head 11, 40, 55, 56
Mixing pressure 32
Monitoring current 32
Motor 13, 60
Multifunction assembly 12

N

Name plate 10
Noise emission values 17
Nominal diameter 38

O

Operating hours counter 75
Operating mode 14
Operating problems 73
Operating volume 50
Operational failure 51

P

Pa 76
Partial load 44
Pascal 76
Personal protective equipment 8
Plug assignment 74
Post-ignition time 15
Post-purge 14
Post-purge time 15
PPE 8
Pre-ignition time 15
Pre-purge 14
Pre-purge time 15
Pressure measuring device 32
Pressure regulator 12, 25
Pressure switch 11, 41, 47
Problem solving 73
Program sequence 14
Protective equipment 8
Pulsating 73

R

Rating 18
Refractory 21
Remote reset 29
Reset 69
Reset button 30
Residence time 15

S

Safety measures 8
Safety symbols 7
Safety time 14, 15
Serial number 10
Service contract 52
Service interval 52
Service plan 54
Service position 58
Servicing 52
Setting diagram 40
Setting dimension 56
Setting pressure 38
Setting screw 56
Shutdown 51
Signal lamp 30
Solenoid coil 65
Sound levels 17
Sound power level 17
Sound pressure level 17
Soundness test 34
Spares 83
Stability problems 73
Standard volume 50
Standards 16
Storage 16
Symbol 7

T

Temperature 16
Test phase 15
Test points 36
Test pressure 34
Transport 16, 20
Type 10
Type key 10
Type of Gas 16, 76

U

Unit of pressure 76

V

Valve proving 12, 46
Valve train 20, 25, 26, 38
Voltage supply 16

W

Warning label 7
Weight 20
when gas can be smelled 7
Wiring diagram 74

–weishaupt–

Max Weishaupt SE · 88475 Schwendi

Weishaupt close by? Addresses, telephone numbers etc. can be found at www.weishaupt.de

We reserve the right to make changes. All rights reserved.

Das ist Zuverlässigkeit. C'est la fiabilité. That's reliability. Questa è affidabilità. 信頼性とは、ころいろものです。Това е надеждност. Ez a megbízhatóság. Đó là sự đáng tin cậy. تسا نانيوطلا تيلباقة نيا To je zanesljivost. Güvence budur. Αυτό σημαίνει αξιοπιστία. 그것은 바로 신뢰성입니다. To je spoľahlivosť. Dat is betrouwbaarheid. Tämä on luotettavuutta. هذه هي الوثوقية See on usaldusväärsus. Pouzdana tvrtka. To jest niezawodność. นั้นคือความเชื่อถือใคั Це надійність. Isto é fiabilidade. To je spolehlivost. यही वशि्वसनीयता है. Det är pålitlighet. זאת אמינות. Esto es fiabilidad. Это надежность. Itulah kepercayaan. 值得信赖。 Is é sin iontaofacht. Iyan ang maaasahan. Aceasta este fiabilitatea. وہ ہے وشوسنیییتا۔ Tai - patikimumas. Det er pålitelighet. Tā ir uzticamība. Sa se fyab. To je pouzdanost. La fiabilité avant tout. Det er pålidelighed.

83055302 ▪ 1/2026-07 ▪ Ch